MASTER OF SCIENCE
THESIS
LCDR. WALTER F. V. BENNETT USN

Thesis
B39

A STUDY OF THE TRANSFER OF SODIUM ION IN RELATION TO THE ION RESTING POTENTIAL IN THE PRODUCTION OF THE ACTION POTENTIAL OF NERVE TISSUE, UTILIZING RADIOACTIVE TRACER TECHNIQUES.

Abstract of

A Thesis

Presented in Partial Fulfillment of the Requirements for the Degree of Master of Science

By

Walter F. V. Bennett, Lcdr., U.S.N., M.C.

The Ohio State University

1961

Aproved by:

_____

Adviser

Thesis
B39

A STUDY OF THE TRANSFER OF SODIUM IONS IN RELATION TO THE ION MIGRATION POTENTIALS IN THE PRODUCTION OF THE ACTION POTENTIALS OF NERVE TISSUE, UTILIZING RADIOACTIVE TRACER TECHNIQUES.

RALPH F. F. STACEY, LIEUT., USN

B.Sc., Manhattan College, New York, 1942

Department of Physics

(Approved by Ralph F. Stacey)

The inadequacy of the Membrane Theory, of nerve potentials, to explain the magnitude and phase reversal of the Action Potential in nerve, has resulted in a proposed modification, the "Sodium Shift Theory." Resting nerve is preferentially selective to potassium ion and impermeable to sodium. During activity, it is held that the selective permeability shifts in favor of the sodium.

Theoretical considerations, of diffusion and electric field forces, predict an ionic current across a permeable membrane separating two unequal concentrations of the same cation, providing anion mobility is regarded as zero.

The object of this research was to investigate the existence of sodium transfer across the nerve membrane during the conduction process and to correlate the magnitude of this ionic current and that of the associated action

potential assuming accepted values of the membrane parameters of resistance and capacitance.

Multifibred sciatic nerves of two subject groups were utilised; 14 leopard frogs (Rana pipiens) and 12 bull frogs (Rana catesbiana). Radioactive tracer techniques were employed to determine the amount of sodium uptake, utilising the isotope Na^{24} in cold blooted Ringer's solution. Nerves were stimulated at 100/sec for three different time intervals.

The results were constant and reproducible, with a positive uptake of sodium per mg. of wet tissue determined in 24 of the 26 cases studied. The following conclusions were reached.

1. A sodium ion current does exist across the membrane of the nerve fibre during the conduction process as predicted.

2. The rate of entry as determined was 30×10^{-11} moles of Na./cm^2/sec during the rise time period. The calculated ionic current was 0.0070mA./cm^2.

3. The value of the membrane potential associated with this ionic shift was calculated at 82.3mv., half the magnitude required to account for the potential phase reversal. It is felt, however, that a parametrically similar biophysical system is in operation.

A STUDY OF THE TRANSFER OF SODIUM IONS IN RELATION TO THE ION MIGRATION POTENTIALS IN THE PRODUCTION OF THE ACTION POTENTIAL OF NERVE TISSUE, UTILIZING RADIOACTIVE TRACER TECHNIQUES.

A Thesis

Presented in Partial Fulfillment of the Requirements for the Degree of Master of Science

By

Walter F. V. Bennett, Lcdr., U.S.N., B.Sc.

The Ohio State University

1951

Approved by:

_____

Adviser

TABLE OF CONTENTS

		Page
SECTION I	Introduction and Survey of Literature.....	1
SECTION II	Methods and Techniques.....	20
SECTION III	Results.....	30
SECTION IV	Discussion.....	48
SECTION V	Summary and Conclusions.....	59
SECTION VI	Bibliography.....	63
SECTION VII	Appendix	
	A. Schematic Diagrams	
	1. General layout of experimental apparatus.....	69
	2. Propagation of an impulse in single nerve fibre according to the modified membrane hypothesis.....	70
	3. Circuit diagram of a single nerve fibre.....	71
	4. Longitudinal section of an isolated nerve fibre.....	72
	5. Typical action potential transient wave record as observed on stimulation of the multifibred sciatic nerve of the frog, Rana pipiens.....	73
	6. Action potential of a single nerve fibre.....	74

Table of Contents

Page

SECTION VII Appendix (cont'd) Page

B. Graphs

1. The sodium uptake of resting nerve plotted against time of exposure in minutes.

(a) Rana pipiens..... 75

(b) Rana catesbiana..... 76

2. The Sodium penetration across the nerve membrane of stimulated nerve plotted against time of stimulation.

(a) Rana pipiens..... 77

(b) Rana catesbiana..... 78

C. Photographs

1. The nerve chamber, radiation shielding, and associated equipment..... 79

2. The electronic stimulating, amplifying and recording equipment..... 80

3. The nerve stimulation platform..... 81

D. Protocols

1. Scheme of individual experiments..... 82

2. Tabulation of experimental data.....

(a) Table I - Rana pipiens..... 83

(b) Table II - Rana catesbiana..... 92

(c) Table III - Surface adsorption of immersed nerve sections of Rana pipiens.....101

Section III Appendix (cont'd) Page

6. Samples

7. The routine process of verified source pick-
ups against their end objectives in question.

(a) Case history.....12

(b) Case summaries.....19

(c) Case histories.....22

8. The routine investigative process (in depth
regular time of retrieval).

(a) Case files.....24

(b) Case summaries.....28

9. Investigation

1. The nature element, restrictive activities
and associated equipment.....29

2. The electronic eliminator, multiplex
and recording equipment.....32

3. The covert eliminator device.....41

4. Summaries

1. Issues of individual constitutionality 42

2. Tabulation of accumulated data-retrieval

(a) Table I - Case histories.....43

(b) Table II - Case summaries.....46

(c) Table III - Nature eliminator of
Democratic Party activities of Case
Officer.....302

SECTION VII Appendix (cont'd) Page

(d) Table IV - Surface absorption of
immersed nerve sections of Rana
catesbiana..... 102

(e) Table V - Summary of Computed Data.. 103

3. List of experimental equipment..... 105

SECTION I INTRODUCTION AND REVIEW OF THE LITERATURE

The immediate objective of this experiment is to study the transfer of sodium ions across the nerve cell membrane during the conduction process with the view of correlating this magnitude of transfer as a function of the ionic or diffusion potential and as a component in the production of the action potential, utilizing radioactive tracer techniques.

The year 1786 witnessed the first recorded experiment in relation to the physics of the nerve conduction process. Luigi Galvani, a young professor of anatomy at the University of Bologna, demonstrated the now classic experiment of producing an excitatory response in a frog's leg when touched by two dissimilar metals. At the time, and as so often the case in the annals of science, the discoverer had a misconception as to the reason for the phenomenon he was observing. Galvani[1] attributed the effect to "animal electricity." Another Italian, Alessandra Volta took issue with Galvani's conclusion and in 1800 showed that the essential phenomenon was not tissue dependent but a function of the dissimilarity of the two metals concerned. With the advent of the voltaic cell, classical physics arrived at one of its brightest and most productive eras. Simultaneously, the stage was set for the investigation of one of the most challenging problems in the combined fields of physics and biology or biophysics as we know it today.

In the testimony of this challenge we note as we review the early literature of experimentation in this field of nerve conduction, the appearance of names of men who were considered pioneers in the classical physics. As a physicist, Hemholtz is well known for his basic work on potential theory. However, in his application of physical principles to the problem of nerve function, he initiated the first of a series of studies to determine the velocity with which a nerve impulse was propagated as well as the electrical effects accompanying it. Both H. Weber and L. Hermann made extensive analytical investigations of the flow of electric current in conductors of cylindrical form in an attempt to better understand the phenomenon of nerve excitation and conduction.(2) We note that no sooner were classical physical concepts accepted as valid, they were applied in experimental work in an effort to produce a satisfactory explanation to the nerve conduction problem. For example, the year 1827 witnessed the development of Ohms law and within a period of months experimentation was being carried out in an effort to see if the law were applicable to impulse transmission in nerve tissue section.

The year 1843 witnessed the demonstration by Du Bois-Reymond of the flow of a current of injury, in a nerve section, in the direction from an uninjured to an injured point. This experiment placed future inquiry on a quantitative basis in much the same manner as Faradays Laws of

electrolysis affected research in electrochemistry after they were stated and accepted. Some ten years later H. Von Hemholtz published a general theory of bioelectric currents in which he showed that measurements of potential difference between two points on the surface of a nerve section will not be sufficient to determine the location or the nature of the electromotive forces that maintain the flow of the injury or demarcation current.(3) A proper definition of this force had to be obtained by other than a surface potential measurement. Hemholtz recognized the nerve conduction problem to be a difficult one where the approach would have to be multiple, with ample use of all available tools of mathematics, physics and chemistry.

Prior to further discussion and for purposes of orientation we refer to Appendix A of Section VII. Diagram No. 4 is that of the longitudinal section of an isolated nerve fibre. What is ordinarily referred to as a nerve is actually a large number of these fibres. The fibres are of two general types, the medullated and the non-medullated depending on whether or not they possess a myelin sheath. The functional portion of the fibre is the axis cylinder which is protoplasmic in nature, a colloidal system possessing organic and inorganic electrolytic components, with water as the dispersing medium.(4) The myelin sheath is in turn covered by a thin connective tissue membrane called the neurolemma. The fibres are organized into groups or bundles,

which are covered by a sheath of connective tissue called the perineurium. These bundles are located in a matrix of connective tissue which is referred to as the epineurium.(5) Experimentation in the past has principally utilized nerve sections such as the frog sciatic which will contain on the average several thousand of these nerve fibres with a fibre diameter ranging from 0.003 mm. to 0.01 mm.(6) In recent years adequate micro dissection technique has permitted the use of the single nerve fibre such as the giant axon of the squid.

In a generally accepted sense, the function of the nerve is twofold. It generates a transient disturbance at the point of stimulation and propagates this disturbance along its entire length to a receptor organ. Whether excitation takes place by artificial means or by the natural process, the neuron always responds in exactly the same way, i.e., by conduction of a single impulse or a series of impulses. This impulse is invariably accompanied by an action potential, which we will presently define, and the only reliable method for the detection of the presence of this impulse is by means of a record of the action potential. As we shall presently note, studies of the nerve impulse have, for the most part, been made on excised nerves stimulated by means of an electric current. Actually other stimulation agents have been utilized in the past, namely pressure, light of a high intensity and specific wavelength

and chemical agents.(7) The conduction process in nerve obeys the "All or None law", in that the quantity and intensity and duration of the stimulating agent must meet specified requirements before the nerve will initiate and conduct an impulse. Some authors will refer to this as the "law of Specific Energies", although this latter term is usually interpreted as to refer to the quality of the stimulus rather than the quantity. In the case of electrical stimulation, the voltage across the electrodes must of necessity be of a certain maximum value and it must change with a certain frequency such that the stimulating current will also change with respect to time in order that the nerve stimulation threshold be reached. The energy expended in propagation is released all along the nerve and is not derived from the stimulus. As in the case of muscle, a refractory period exists for the nerve. The period is subdivided into an absolute portion, during which a stimulating agent no matter how strong or specific will fail to initiate a response in the nerve tissue, and a relative portion in which a more specific than normal stimulus is required to initiate the conduction process.(8) The absolute value for the refractory period for the sciatic nerve of the frog is, for example, 0.00 sec.

The impedence elements of nerve are bi-directional in that an impulse in an excised nerve section travels in both directions from the point of stimulation although normally

in the insitu case the impulse is unidirectional due to the general synaptic arrangement which nature has provided.

Some five years later, in 1848, Dubois-Reymond stated that excitation in nerve was a function of the time rate of change of the current density. Since that time, that relationship has been verified for almost every known irritable tissue examined.(10)

Reymond failed to carry his experimentation on to any further significance principally due to the lack of sensitive recording instruments. Adrian stated the problem of the period quite well when he said, "The history of electro-physiology has been decided by the history of electric recording instruments".(11) The period of the latter part of the nineteenth century was therefore one of great technical difficulties. The currents associated with the conduction process were extremely small and during the course of activity, would fluctuate very rapidly. The early research depended to a great extent on the mirror galvanometer which will show a current change but the inertia factor together with the fallibility of the human judgement introduced errors of considerable magnitude. As a result, indirect evidence was resorted to, which resulted in bitter controversies in the question of the proper interpretation.

The first attempt to obtain a record of the monophasic action potential was made by a German physiologist, L. Hermann, in the year 1891. Utilizing a group of capillary

electrometers with a trained observer on each instrument and after a large number of trials, the data was reconciled. The potential drops between the electrodes were computed and the curve was drawn. Lorente de No shows some tracing of the monophasic spike of the action potential, which were produced by Hermann, in his Rockefeller report.(12) While they were, no doubt, specially selected, this writer was deeply impressed with the resulting accuracy when we consider the technical problems which were involved. L. Hermann treated the nerve as an inert core conductor and proposed a theory to account for the existence of the electromotive force was created by the injury itself.

In the year 1902, a hypothesis was put forth by J. Bernstein to explain the existence of this electromotive force. Apparently Bernstein was deeply impressed with the electrolytic dissociation theory as advanced by Svante Arrhenius in Stockholm some fifteen years before. Bernstein regarded the nerve membrane as having the property of selective permeability, allowing certain ions in and rejecting others. It should be appreciated that he suspected that these ions would vary in size and that he had, of course, no means of determining the size of the ions concerned. Nevertheless, armed with the knowledge of some collateral information together with the phenomenon which was observed, he proceeded to detail a theory which would explain qualitatively the origin and nature of the observed

emf. He considered the nerve membrane as permeable to the potassium ion but impermeable to the sodium cation and anions in general, with the difference in the potassium concentrations in the interstitial fluid and the interior of the nerve, responsible for the resting membrane potential. As a result of this selective permeability, the potassium ions will form a layer of positive charges on the border of the cell membrane and just beyond. The anions which are present in the axoplasm will form a similar layer just within the membrane, the net result being a double layer, separated by a membrane and thus exhibiting a difference in potential. Thus he regards the axoplasm as negative and the interstitial tissue fluid as positive. Bernstein thus accounts for the current of injury being initiated as a result of the local damage or rupture of the membrane. The potential difference preexists and on membrane rupture a current flows in the outer circuit from the intact surface as a positive pole to the injured area as a negative pole.(14) Bernstein's theory has often been regarded as correct in essence as a definition of the resting membrane potential with a wide reference made to it in the literature. Today it is known more specifically as the Membrane Theory. While the theory does possess limitations which will be discussed later in this section, some recent experiments have advanced rather convincing evidence in favor of the membrane theory.(15)

J.J.Macdonald in 1902 conducted significant experiments with the injury potential of medullated nerve. He found that by increasing or decreasing the concentration of Potassium in the bathing solution there was a direct effect on the magnitude of the action potential observed. He noted a logarithmic relation between the concentration of the Potassium ions outside the nerve and the concentration inside the nerve. This contribution was made about the same time that Bernstein formulated his hypothesis; nevertheless the literature attests that Macdonald was the first to state that the relative Potassium concentrations in the axis cylinder and the tissue fluid were responsible for the injury potential.(16) At the time of publication of the report of Macdonald's work, he was criticized for failure to maintain his bath solutions isotonic with that of tissue fluid as he varied the Potassium concentrations. Then too, he did not make any allowance for the osmotic pressure effect nor were any references made to the condition of his nerves, upon completion of his runs. For that failure of omission, the findings were taken somewhat lightly at the time but in the years to come his work stood the test of duplicated inquiry to the extent that his results are considered valid.

In the year 1908, Hermat in a non too detailed treatment(17) suggested that the nerve fibre and the external fluid represented a system in equilibrium. He postulated

that the membrane potential was a phase boundary potential similar to the boundary potential which appears at the boundary between two immiscible solvents when an electrolyte solution having different activity coefficients distributes itself between the two solvents. Nernst carried his ideas further on the basis of dynamical considerations and developed his well known equation for the diffusion potential

$$E = \frac{RT}{F} \frac{(u - v)}{(u + v)} \log_e \frac{C_1}{C_0}$$

where u represents the cation mobility and v is the anion mobility. Bernstein assuming that the anions were immobile, set v equal to zero and used Nernsts equation as an expression for the membrane potential which will now appear as,

$$E = \frac{RT}{F} \log_e \frac{C1}{C_0}$$

On proper substitution in the foregoing equation with the value of R of 8.314 joules per mole per degree, with an F value of 96,500 coulombs per Faraday of electricity and suitable conversion to the base ten log scale, the following simple expression results, at 18° Centigrade,

$$E = 58 \log_{10} \frac{C_1}{C_0} \text{ mv.}$$

We now consider the mechanism proposed for the action of this potential during the conduction process. Consider a finite length of a single nerve fibre. The extreme right end is reference point 3 and the midpoint of the fibre is point A. We place two electrodes at these points with sim-

ilar designation. The point B end is then injured by crushing. A sensitive voltmeter is placed between electrodes and the resulting reading will indicate point A as positive to point B. This potential difference is that indicated by the foregoing membrane theory considerations. Consider now two stimulating electrodes placed to the extreme left end of the nerve section. Upon stimulation, a change in permeability occurs beneath the electrodes and due to the potential difference between the outer and inner membranes, an action current takes place in an inward or coreward direction. The impulse then travels to the right along the nerve. Upon reaching the recording electrode at A, the two points A and B are then isopotential. As the impulse travels further on, the memorane beneath the electrodes at point A regain their insulation function or repolarize and point A becomes positive to B once again. A record of this transient variation of potential as the impulse travels over the nerve is called the action potential and in this particular case it is identified as a monophasic type.[16]

Similarly, we may consider a nerve section which is not crushed but two electrodes are spaced an equal distance apart from the midpoint of the length of the fibre. From left to right as we observe the nerve we identify them as electrodes A and B. At the extreme left end of the nerve section we place a pair of stimulating electrodes and commence stimulation. The membrane beneath the stimulating

1.

electrodes depolarizes as before and when the impulse reaches the vicinity of electrodes A, the electrode A will go negative with respect to the B electrode. As the impulse passes and the membrane beneath A comes back to its polarized state, A then resumes its isopotential relationship with respect to B. When the impulse reaches the point B, the inverse portion of the wave is executed. In a potential versus time plot, this transient condition would represent itself an inversion of a sine wave. This type of record is called a diphasic action potential.

In view of the foregoing explanation it would seem that the action potential could not be larger than the magnitude of the resting potential. This was the opinion of the 'membrane potential' school for many years and was in fact accepted until 1940.(19)

At this point we will introduce a refinement of the definition, action potential. It has been observed by experiment that the action potential was composed of several component parts and not limited to one smooth variation, but including not only the event discussed above but also positive and negative after potentials. The potential wave to which Bernstein et al referred is now designated in the literature as the spike potential. The above monophasic and diphasic variations are properly called the monophasic and diphasic spike potentials.(20)

In 1912, J. Beutner introduced his membrane model in an

effort to account for the membrane potential. The model consisted of aqueous solutions separated by a layer of immiscible liquid.[21,22] He has taken the license to extrapolate this phenomenon to living systems. In one of his earlier models which may be described as 0.1 N KCl/Salicylic aldehyde and salicylic acid/0.0003 N KCl, he was able to report a membrane potential of 100 mv., with a positive charge existing on the membrane side of the lower concentration. By variation of the concentration of the solution on the left, the negativity increased. In similar experiments he utilized mono and divalent anions but retained the same cation Na., with the same result. Beutner's logic in reasoning the nature of the forces operating or the factors involved are somewhat confusing. He tends to believe the charge distribution is a function of the partition of the ions in the respective solvents with the idea of a concentration cell in mind. However, he repeatedly adheres to the idea that the organic film or pseudo membrane is responsible for the emf of this and living systems. To quote from Lorente de No, "Beutner's concept of the nerve membrane is difficult to follow".[5] Since 1912 and up to the present time, Beutner in collaboration with T. Cuncliffe Barnes has repeated his model experiment with numerous variations for the organic interface and with variations in solvent salt concentrations with interesting results for membrane potentials.[23,24,25,26] In a more recent experiment, Beutner and

Barnes have found that Acetylcholine, a physiologically important organic compound has a marked effect on the potential difference of an oil saline interface.(27) This work is significant in light of further consideration of the function of metabolism on the maintainance of the resting potential.

In the period just prior to the first World War, the application of vacuum tube amplification to nerve conduction and potential study was made by Dr. Keith Lucas of Trinity College, Oxford. By means of this advance, Amberson and Downing made the first report on the components of the action potential having noted the positive after potential in a monophasic wave.(28)

The years that followed the war saw the application by Erlanger and Glasser of the cathode ray oscilloscope to experimental study. In their work the results of Amberson and Downing were verified, and in many respects amplified. They conducted a thorough study of the spike components due to the class of fibres participating in the conduction as observed in a transient wave pattern.(29,30) In a later experiment Douglas et al worked out the preliminary correlation between fibre size and potentials observed. At a later date, this work was consolidated by Gasser and Grundfest wherein they showed a higher potential value and a higher conduction velocity in proportion to the axon diameter.(32)

In the mid twenties, L. Lillie and his introduction of the passive iron wire model as a parallel to the conduction process and Michaelis with his work on the collodin membrane added weight to the membrane theory.(24,34) The membrane used by Dr. Michaelis was a partially dried colloidin membrane which exhibited a marked selectivity to ions, allowing the cations or anions through respectively depending whether or not the pores of the membrane were negatively or positively charged. If one may regard the nerve membrane to possess negatively charged pores, we have a system postulated by the Bernstein theory.

In the early thirties, experimental effort proceeded along the lines of two major subdivisions, namely that of the physical and that of the chemical aspects of the problem. Significant studies, which assert that a metabolic and chemical process operates in some phase of the conduction phenomenon, were made by A. V. Hill and H. W. Gerard.(28,36) The position of metabolism function was strengthened by reports of increasing oxygen consumption by nerve during activity and the effect of metabolic inhibitors on the resting potential as reported by Brames.(27) In 1936, Dr. Bachmanom first introduced the idea of the association of acetylcholine with the conduction process. His work significantly correlated chemical energy equivalents to account for the corresponding electrical energy of the action potential and introduced the time factor consider-

ation for the first time.(38) The attention to the chemical aspects of the problem increased when T. S. Germes in a more recent report of his work on organic interface model system,(39) stated:

> ".....In conclusion it would appear that the basis of nervous energy resides in the phase boundary electrical potential generated by compounds in the nervous system containing tetracovalent nitrogen of which the outstanding example is acetycholine."

Still more recent work, of only a few short weeks ago, of Eyring and Johnson,(40) states that the source of energy for the potential difference of the resting state of the membrane is due to the metabolic production of acids from non-electrolytes such as glucose. Eyring states a belief that:

> "The differential rate of escape of K-ions and organic anions through the semipermeable membrane maintains the potential....Upon stimulation, increase in permeability permits freer diffusion and a reduction in the potential difference which, in nerves, is then quickly restored by the rapid production of acetic acid from acetylcholine through cholinesterase activity."

Unfortunately the abstract states no more than a theory which has often come to mind of a good many workers in the field during the past ten years. It represents a desirable reconciliation of two divergent points of view but the more curious of us would like to see the experimental data and proof.

In the six year period prior to the second World War, a continuous study was made on the electrical characteris-

ties of the nerve membrane. The terms membrane resistance, conductance and impedance began to make their appearance in the literature. Curtis and Cole [5,41,42] made successful measurements of the impedence of both Nitella and the giant squid axon membrane utilizing the balanced A. C. Wheatstone bridge with leads to the vertical deflection plate terminals of an oscilloscope. By means of mathematical manipulation, the impedance is expressed as a function of the bridge parameters. [43]

At this time extensive theoretical consideration was given to describing the various aspects of the stimulation problem taking departure from the fact that the potentials were assumed and expressing the rheobase, and stimulation threshold as functions of voltage, charge density and time. Much of this work had to be revised in light of developments in 1940.

In 1940, Kenneth Cole and H.J. Curtis perfected a technique for using micro electrodes for insertion into the axoplasm of the giant squid axon. By measurement of the action potential utilising two electrodes, one external and one internal it was noted that the transient wave was as shown on Diagram 4-6. It was noted that the outer surface electrode not only went to zero potential with respect to the inner electrode but also swung strongly negative. [13] This actually represents a complete reversal in phase and is not predicted by the capacitative aspect of the

membrane theory. The magnitude of the action potential was as great as 100 mv. while the injury or membrane potential was rarely greater than 80 mv. This points up an inconsistency in the membrane theory which predicted that the action potential could never be larger than the membrane potential. This work of Curtis and Cole was duplicated at the same time and independently in England by Alan Hodgkins and A.F. Huxley with confirmatory results.

The experimental results definitely demanded a revision of the membrane theory to account for this observable overshoot or phase reversal. In 1941, Cole discussed the possibility of an inductive element in the nerve membrane being responsible for the overshoot as for example in the conventional oscillatory circuit, basing the existance of a membrane property as a parallel to the piezo electric crystal reaction.(46) This idea was not pressed too deeply but was rather well thought out by Cole.

Today the problem of accounting for the magnitude of the action potential still remains a challenge. However, Hodgkins and Huxley feel the reversal of the membrane potential during the action potential can be explained on the basis of a change in the selective properties of the membrane during certain periods of the conduction process.(47) The resting membrane is held to be more permeable to potassium than to sodium. On stimulation there exists a permeability shift such that the membrane becomes highly

permeable to the sodium ion. A reversed membrane potential can arise in a system of this type providing that the concentration of the sodium in the external solution is greater than the concentration in the axoplasm. With this in mind, the research phase of this thesis was directed. If at all possible, it will be our aim to correlate the transfer of the sodium ions with the magnitude of the action potentials. To do this we will apply the theoretical considerations of the diffusion equations of Teorell and Goldman with modifications to be presently described.(48,49)

The author wishes to express his deep appreciation to Dr. Ralph W. Stacy, under whose direction this work was done, for the assistance and guidance given him; Dr. Eric Ogden for his thoughtfulness and cooperation; and to Dr. W. O. Myers for his suggestions and procurement of the required isotopes of Sodium from the Oak Ridge National Laboratories.

SECTION II METHODS AND MATERIALS

A preliminary consideration prior to experimentation was that of selecting one of two available isotopes of Sodium, Na^{22} produced by Mg^{24} (d,a) Na^{22} (67) reaction with a $T\frac{1}{2}$ of 3.0 years, and a decay scheme;

$$_{11}Na^{22} \longrightarrow \gamma(1.28) + \beta^{+}(0.58) + {}_{10}Ne^{22}$$

or Na^{24} produced by a Na^{23} (d,p) Na^{24} (68) reaction with A $T\frac{1}{2}$ of 15.1 hours and a decay scheme;

$$_{11}Na^{24} \longrightarrow \gamma(2.753, 1.390) + \beta^{-}(1.38) + {}_{12}Mg^{24}$$

While use of Na^{22} would facilitate decay computations, the decision was in favor of use of Na^{24}. The relative higher energetic beta emission was desirable from the view of the smaller self absorption counting loss of samples. Then too, the longer half life of Na^{22} with $T\frac{1}{2}$ of 3.0 years would demand a more extended disposal and decontamination technique in the event of an accidental spill.

The isotope Na^{24} was made available by Dr. M. L. Pool of the Physics Department of Ohio State University by means of cyclotron bombardment. Later arrangements were made through Dr. William G. Myers of the Ohio State University for procurement of Na^{24} from the Isotopes Division of the Oak Ridge National Laboratories.

In view of the gamma emission of 2.753 and 1.390 Mev for the Na^{24} isotope, extreme care was exercised in dilu-

tion techniques and the degree of shielding employed. The gamma quanta dosage rates were calculated on the basis of the relation Rf = 6 CE where C is the activity in millicuried, E is the average quantum energy in Mev and Rf is the dosage rate in milli-roentgens per hour at one foot distance unshielded.(68)

The degree of shielding to be used was calculated by the usual exponential relationship.

$I = I_0 e^{-ux}$ where I, I_0, u and x have their usual significance. For lead and red brick, the following absorption coefficients were utilized.

Energy (Mev.)	Pb(69)	Red Brick(70)
1.09	0.52 cm.$^{-1}$	0.113 cm.$^{-1}$
2.75	0.47 cm.$^{-1}$	0.0826 cm.$^{-1}$

Upon completion of calculated requirements and erection of the shielding material, the area about the shield was always monitored by means of a portable ionization chamber calibrated to read in mr. per hour in order that the calculated dose rate may be checked.

The activity of all radioactive shipments was determined upon receipt. In case of Oak Ridge shipments a comparative check was thus made with the activity reading on the shipping bill. For the case of the Na^{24} received from the Ohio State University cyclotron, an assay had to be made to determine the activity. The true activity of the sample was determined by application of the geometry factor g_p, to the count rate computed from the total mea-

ber of counts and the lapsed time or in equation form.

$$\text{No. of uc.} = G_f\left(\Delta n/\Delta t\right)_{sc}/(2.7\times10^{7})$$

This relation checked accurately with shipment data of the isotope shipments. The factor G_f, of course, was determined for a constant geometry of the assay sample holder by comparing the recorded activity of a standard reference source with the activity of the source as determined by our counting equipment.

We were in effect provided therefore with two methods of a scaling circuit check. Thus daily, prior to counting, the auto scaler was checked against line voltage and secondly, the geiger tube and scaler were checked for a constant geometry factor. This factor fortunately remained constant all during the experimental work.

The arrangement of the experimental equipment was as shown in the schematics and photographs of the appendix. The stimulation isolation unit was inserted between the stimulator and the stimulating electrodes to reduce the stimulus artifact to a minimum so the nerve action or spike potential might be more clearly seen on the oscilloscope. The purpose of the oscilloscope in this experiment was purely for monitoring the viability of the stimulated nerve.

On receipt of the air shipment of the Sr^{+4} from Oak Ridge the shipment box was placed under a hood. To the

solid salt, 15 ml. of Ringers solution was added. The salt was quickly put in solution by mechanical mixing and the solution was then transferred to a glass bottle and placed in a portable lead container. The target solution, so called, was now ready for assay. Since the number of grams of $NaCO_3$ shipped was known, the number of Sodium ions in solution could be easily calculated.

Where the Na^{24} was obtained by deuteron bombardment from the cyclotron, the procedure was slightly modified. The copper target used for the bombardment was accurately weighed prior to loading with salt (NaCl). Upon receipt of the target from the cyclotron, the target plus salt was weighed. This was done behind appropriate shielding and with constant monitoring technique. The amount of salt was obtained by difference. The target and salt was then placed in 5 ml. of Ringers solution and allowed to stand for fifteen minutes.

In the assay of target salt solutions, usually 0.2 ml. of solution was withdrawn by remote pipette and this 0.2 ml. was diluted to 100 ml., one ml. of which was counted. The activity of the initial solution was thus obtained. A sufficient amount of target or initial salt solution was then withdrawn by remote pipette and diluted to provide a working solution of 1000 cps. per ml. Usually 100 to 130 ml. of working or bathing solution was prepared and stored in the aspirator bottle within the lead

shielding. (Note Appendix C-1.)

The nerve stimulation platform was specifically designed for this experiment. Four parallel wire troughs were milled out in a rectangular block of lucite 81 mm. x 20 mm. x 7 mm. The troughs or guides extended longitudinally 61 mm., 0.75 mm. wide, 1.4 mm. apart and were cut to a depth of 3.5 mm. A rubber stopper fitted with four holes to meet the milled wire guides of the lucite platform, was attached to the butt end of the lucite block by a small "L" type copper flange. Note picture No. 3 of Appendix C. Number 30 gage Platinum wire with a resistivity of 10×15^{-6} ohm cm. or 1.969×10^{-2} ohms per cm. of length at 20° C. was used. The wire was embedded in the guides by means of a clear plastic insulation cement. The electrodes were fashioned by two simple 90° bends and set 3 mm. apart prior to the setting of the cement. The second set of electrodes were similarly spaced in the guides and cemented in 24 mm. from the first electrode set. A small lucite plate served to spread the platinum wires as they exited the rubber stopper and terminated at the electrical terminals preset in the plate. This plate was connected to the stopper by the usual "L" type copper flange. The unit was then given a standard insulation resistance test and the results were in the vicinity of 1000 megohms. Throughout the experiment the unit functioned very satisfactorily with the electrodes salting out on

just one occasion. This was to be expected in view of the constituents of the bath solution. Consequently the practice was established of cleaning the electrodes upon the completion and prior to the start of a run.

Two species of frogs were used to obtain sections of sciatic nerve. Fourteen experimental runs were made with the leopard frog, Rana pipiens, and twelve runs were made with the giant bull frogs, Rana catesbiana.

The animals were handled in the following manner. The frogs were sacrificed and both sciatic nerves were carefully excised using normal dissection techniques. The nerve was carefully cleaned of all small blood vessels while in situ and upon excision were placed in cold blooded Ringers solution. Careful handling of the tissue section was mandatory, to avoid any damage to the nerve.

The nerve sections were then arbitrarily designated the stimulated section and the control section and then placed on the nerve platform. The control nerve was attached by thread at the extremities to the attachment rungs of the nerve platform. The experimental nerve section was similarly attached but racked over the platinum electrodes on the electrode side of the platform. A slight degree of tension was required in case of the experimental nerve in order to insure a good electrode contact. This tension was duplicated for the control section.

After placing nerve sections on the electrode platform, the unit is then set into the nerve chamber at D (Appendix A-1). The petcock at the left opened, the right and lower petcock closed, allowing cold blooded Ringers to enter and rise in the nerve chamber. When the meniscus of the Ringers solution covers the entrance of the nerves, the left petcock is secured. At this time the requisite electrical connections are made. The nerve is stimulated at a frequency of 100 impulses per second with an impulse duration of 0.5 millisecond. The Oscillograph is monitored for the action potential. After the action potential or rather the spike is observed, the lower petcock is opened and the nerve chamber is drained of Ringers solution. The chamber is then filled with the Ringers solution containing the radioactive tracer component. Both nerves are immersed in the bathing solution for a period of thirty minutes prior to stimulation in order that surface adsorption phenomena will arrive at the equilibrium point.

Stimulation runs of 16 min. and 40 sec., 33 min. and 20 sec., and 50 min. were executed, with the stimulation total at 100,000, 200,000 and 300,000 stimuli respectively. The duration of stimulus was 0.5 millisecond with a potential difference across the stimulation electrodes of 8 volts. The time of initial stimuli was designated t_i and the time of termination of stimulation was

designated by t_4.

Upon completion of the stimulation at t_4, both nerve sections were rinsed with the non-radioactive Ringers solution for five consecutive rinses in order that the surface adsorption might be minimized. After rinsing, the stimulated and control sections were removed from the electrode platform. The necessary lengths, approximately 8 - 10 mm. of nerve, were removed from the extremity of both nerve sections and placed in labeled vials containing ten percent formalin for purposes of preservation for later histological study. The residual portions of both control and stimulated sections were measured for length, and then placed on pre-weighed aluminum lined counting planchets. The nerves were spirally coiled in the planchet center for pattern uniformity. The times for determining the count rate of the control and the stimulated section were designated t_3 and t_5 respectively for purposes of recording data. Upon completion of the wet count, two drops of 2:1 nitric acid were added to the nerve sections and these were heated lightly to a slight residual ash. The count rate for both the experimental and control ashed samples was then made. The same type of time designator was used.

The bathing solution containing the tracer Na^{24} which was drained off at the termination of stimulation is then assayed. By means of the remote control pipette 0.5 ml.

of the bath solution is drawn off and diluted to 100 ml. One ml. of this diluted solution is counted. By proper calculations the activity of the bathing solution is determined.

As will be shown in the next section, all count rate determinations are corrected to one reference time, t_i in particular. Thus all decay corrections are applied to all count rates so the rates may be compared at the same reference time.

In the initial stages of development, we intended to determine the count rate on the basis of gamma emission, neglecting the beta by means of aluminum filters. However, in view of the higher beta efficiency of the counter tube compared to the gamma as was clearly brought out by a regular Na^{24} aluminum absorption study, it was decided that the beta emission was definitely to be considered. The gamma count is included of course but since this is in the vicinity of $\frac{1}{4}$ of 1% of the beta count, there is no concern over the procedure.

The possibility of a counting loss due to self absorption of the beta particles by the tissue ash was investigated. Nerve sections of variable weight were placed in aluminum lined planchets containing 1 ml. of a solution of a known activity. The ashing technique was carried out, on the completion of which, comparative count rates were made. Due to the small sections of nerve used and

the short air path to tube window, there was no significant difference noted. Therefore, it was decided that the self absorption loss correction could be neglected.

For purposes of histological study, the nerve sections were treated in the usual water, 70% alcohol, 90% alcohol, absolute alcohol, and chloroform stages with five hours in each stage. The sections were then placed in the paraffin biloid series at graduated temperatures and then imbedded in rubberized paraffin. The sections were then microtomed and slides prepared. By this means, the number of fibres in each nerve were determined. It was hoped at first that the diameter of the fibres might be determined by use of a Bausch and Lomb ocular micrometer but this proved unfeasible due to a shrinking of the nerve tissue during the immersion stage process of sectioning.

SECTION III RESULTS

Prior to the survey of the results of the experimental phase, we shall once again state the objective of this study. We are initially interested in the existence of a sodium ion transfer across the nerve membrane during the conduction process, the magnitude of that transfer, and the magnitude of the associated potential. We are interested further in a comparison between the computed value of the potential associated with this ionic transfer and that value of the magnitude of the action potential which is a matter of record in the literature.

It will be shown presently in Section IV that theoretical considerations indicate the existence of an ionic current density as a result of the action of two forces, one the result of a concentration gradient and the other due to electrical considerations of an existing potential gradient. We will examine the constancy of the computed value of the associated potential with a view toward the possible correlation of this value as a part of the total ion migration potential which is responsible for the ionic current as defined by equation VIII of Section IV.

In Table V of Section VII, the summary of computed data is listed. It is noted that runs 1 to 5, where the nerve sections were stimulated for a period of 16'40", show an average uptake of Na ions in the amount of

9.574×10^{10} ions per stimulus per cm^2 of membrane surface area. The series of nerves which were stimulated for a period of 30'20" show a comparable average value of 11.86×10^{10} ions per stimulus per cm^2. In the third period of stimulation, that of 50', there is a marked falling off of the number of ions taken up by a nerve section. In this case the average value was 4.41×10^{10} ions per stimulus per cm^2.

In graph B-2 of Section VII, which represents the uptake of sodium ions per mg. of wet tissue versus the time of stimulation, there is a strong indication of an operating force which is quite constant in function. It will be noted that with the time limits of zero to 30'20", the uptake is linear. In fact, in the case of the uptake for the nerve sections of the subject Rana pipiens, the computed values fell in so closely that no statistical analysis was warranted. The curve drawn on graph B-2(b), shows a linear relationship between uptake and stimulation time. However, in this case, there was a degree of scatter to the plot which warranted statistical consideration of the small sampling method technique. Apparently, there is an uptake which is linear with time and then a "fatigue" function sets in, which we shall presently discuss.

With reference to our initial consideration, then we note that an ionic migration has occurred across the surface area of the nerve and passed into the nerve

tissue to a certain distance. We justify this conclusion on the basis of control considerations and the experimental results which show a positive uptake, in an overall survey, in 24 of 26 cases. This differential between control and experimental sections is well defined as shown in the data of tables I and II of the Appendix.

The number of moles of sodium which have entered the section per stimulus per cm^2 of surface area are given in the following tabulation, for runs 1 to 14 inclusive.

Run No.	No. moles of Na taken up by section per stimulus per cm^2.(Avg.)
1-5	1.589×10^{-13}
6-10	1.970×10^{-13}
11-14	0.782×10^{-13}

At this point we postulate, for reasons to be discussed later, that the increased permeability of the membrane to the sodium ions or the ionic migration occurs during the rising period of the action potential. From the literature we take the value of 0.456 msec for the rise time. Considering the time factor, the above ionic transfer may be expressed in terms of the number of ions which enter the membrane per second per cm^2 during the rising phase. In the following tabulation we have the expression for average rate of entry during this period.

Run No.	No. moles Na per sec per cm^2 (Avg.)
1-5	$34.9x10^{-11}$
6-10	$4[illegible].2x10^{-11}$
11-15	$15.0[illegible]x10^{-11}$

These values indicate a degree of constancy within the time limits of zero and 33'20" with a fall off rate of entry after the 33'20" period. The values are in fairly good agreement in magnitude with the theoretical value computed by Hodgkins and Katz in 1948 (47) for the single nerve fibre of the squid, of $8.4x10^{-11}$ moles /sec/cm^2.

The time average for the ionic current computed by application of the Faraday value of 96,500 coulombs/mole to the above rates of entry, gives

Run No.	Milli-amperes per cm^2 (Avg.)
1-5	0.0[illegible]6mA.
6-10	0.0416mA.
11-14	0.0155[illegible]A.

The same values are obtainable by a time average of the coulomb transfer as shown in the Table V.

If we consider the potential requirements of a theoretical membrane condenser with a capitance of $1.2x10^{-6}$ farads/cm^2 with no resistance considered, the following potential values are obtained.

Run No.	Potential Diff.(Avg.)
1-5	12.72mv.
6-10	1[illegible].8[illegible]mv.
11-14	[illegible].88mv.

It is readily appreciated, by inspection, that these values are of such a magnitude as to warrant disposal of the idea of a pure capacitive case from further consideration. It is to be noted that the first ten runs do maintain a degree of constancy in these calculations.

We next consider the case of the theoretical membrane condenser of 1.2×10^{-6} farads/cm^2 capacitance in series with a membrane resistance of 1200 ohms/cm^2. By means of equation IV-c of Section IV, the following potential values, which a membrane condenser would have to have, to discharge through a given resistance value in the known rise time equivalent, are listed.

Run No.	Potential Diff.(Avg.)
1-5	47.24mv.
6-10	58.60mv.
11-14	21.77mv.

The results of observed and computed values for the second subject group, the Rana catesbiana, are included in Table II of the Appendix. The surface area determinations were made on the basis of an arbitrary value in this group inasmuch as the histological sections for this group were not ready for study and evaluation at the time of writing. The values listed in Table II indicate a trend but inasmuch as little or no analysis can be made, these values are not listed here.

In the case of the first group of fibres, a good approximation of the surface area could be made on the

basis of Hardesty's [60] thorough investigation of the number and arrangement of the nerve fibres of frogs of this group type. This report indicates a mean of 4200 fibres in the sciatic trunk of the Rana pipiens in the 50 gram body weight range with a mean fibre diameter of 7.5×10^{-4} cm. These values were utilized in the computation of the surface area of the nerve sections.

SECTION IV DISCUSSION

THEORETICAL CONSIDERATIONS

(A) Dosage Evaluation

In view of the fact that the literature reports, with a few exceptions, (51,58) that radiation tends to increase the permeability of the cell membrane, it is necessary to evaluate the possible effect the levels of radiation, used in this experiment, had on the nerve section under study. Ordinarily, we would calculate the theoretical dose a tissue section would receive during an immersion period and then run control and experimental sections under stimulation in non-radioactive and radioactive solutions respectively. Any differential observed in permeability or conduction characteristics could then be correlated with the dose received and evaluated accordingly.

However, due to limitations of time, our procedure will be to calculate the maximum theoretical dose and compare this with the data available in the literature. It will be recalled that of all the common tissues, the nervous tissue possesses the least sensitivity to the particulate or electromagnetic type of radiation. (50) In regard to data comparison, the work of Dr. S.Rothenberg includes information as to the dosage required to effect a change in the permeability of single fibred

CHAPTER II DEFINITION

(85)
nerve.

We recall that Na^{24} on disintegration to stable Mg^{24} will yield a beta of 1.39 mev. and two gamma rays of 1.38 and 2.76 mev. energy per disintegration. In a theoretical dose calculation we must, therefore, calculate the dose received due to the two radiation components in the emission from Na^{24}. Inasmuch as we are to make our comparison based on the highest dose which any nerve section received in any one run, we select the highest value of the activity for any bath solution in the experimental data as set forth in Appendix XIII B-1.

In run No. 20, a multifibred sciatic section was immersed in a bathing solution for 30 minutes with a count rate, uncorrected for geometry, of 7,230 cps. The expression for the activity in microcuries per ml is:

Eq. (I) $\mu c. = (dn/dt)\, f_g / 3.7 \times 10^4$

where f_g is the correction factor for the geometry, air path absorption and mica window absorption. With $f_g = 75.6$, the activity becomes on substitution, 0.72 uc per ml.

In the determination of the number of roentgen units we shall first consider the dose received as a result of the beta emission. Consider a nerve section 20mm. in length and 1mm. in diameter placed on the nerve platform, the thickness of which is 7mm. In view of the fact that the maximum range for the betas of the Na^{24} emission is 6mm. in water, the calculation will be simplified if we

consider the beta emission from the solution on the other side of the nerve platform as completely attenuated.

The average energy available per ml. of solution will be.

Eq. (II) $A_s = 3.7 \times 10^4 \; u \; \bar{E}_b$

where u represents the isotope concentration in uc/ml. and $\bar{E}_b$ equals 0.33 mev. the average energy of the beta particles. The total dose received by the nerve section for a period of time of 30 minutes may be found from the expression, (64)

Eq. (III) $D_b = 3.7 \times 10^4 \bar{E}_b \int_0^{\bar{t}} \int_0^{\bar{v}} u \; g \; dvdt/n\bar{r}$

where u retains its above significance, g is the geometry factor, n is the number of ion pairs formed per gram of air per roentgen and $\bar{v}$ is the energy equivalent in electron volts per ion pair. On substitution and integration, the dose due to the beta component of the radiation will be 150 mr. at any point on the surface of the nerve section.

The calculation of the surface dose received at any point by the nerve section as a result of the gamma component of the emission spectrum is determined by the theoretical treatment of Marinelli and Mayneord. (65) For purposes of symmetry we will calculate the dose rate and then the integral of this function over the time run at a point on the surface of the nerve section midway between its ex-

tremities which we designate as point 0.

The following equation represents the dose rate calculated at the surface at point 0

$$\text{Eq. (IV)} \qquad d_\gamma = \int_0^{\bar{V}} \frac{I\, c\, e^{-u\bar{R}}}{R^2}\, dV$$

where I_γ is a function of the number of gamma rays emitted per disintegration, the linear absorption coefficients for Compton scattering, photoelectric and pair production effects. The quantity c is the concentration of isotope in mc. per ml. of solution. R is the distance between an element of volume dV and the point 0. The term u represents the linear absorption coefficient of the bath solution.

The total dose is then expressed as:

$$\text{Eq. (V)} \qquad D_\gamma = \int_0^{\bar{t}} d_\gamma dt$$

On substitution and solution, the calculated surface dose for a nerve section due to the gamma components of the radiation is expressed as:

$$\text{Eq. (VI)} \qquad D_\gamma = \sum_J (I)_J c \int_0^{\bar{t}} \int_0^{\bar{V}} \frac{e^{-uR}}{R^2}\, dV dt = 1.74 \text{ roentgens}$$

where J takes value 1 and 2 since two gamma rays are emitted in the disintegration process. The integrand in this solution is solved by a first term series approximation. This is valid inasmuch as the linear absorption

coefficient for water, in case of gamma, holds quite close to 0.06 $cm.^{-1}$ in range to 0.1 to 3 mev.

In summation we calculate the total dose in roentgen equivalent physical units to be 1.87 R.at the surface of the nerve section. In view of the approximations which have been made in these calculations, with regard to geometry and beta absorption, this value represents an upper limit. An evaluation of the possible effect a dose of this magnitude would have on the nerve function will be made in the latter part of this section.

(B) Action Potential and Ionic Current Density

It will be recalled from our review of the literature that the Bernstein theory of the membrane potential can account for magnitude and sign on the basis of relative ionic concentrations in the axoplasm and interstitial fluid, when these factors are introduced into the modified Nernst equation. Most research done to date on these relative concentrations places the ratio at a minimum of 10.1 with the majority of reports at higher values.[38] When one substitutes this ratio into the modified Nernst equation the result of 58 mv is obtained. We recall that the membrane is positive with respect to the axoplasm.

It was demonstrated by Curtiss and Cole that the shift in membrane potential during the activity phase will be in general of the order of 60 mv to -40 mv. This represents

a potential difference of a magnitude in the vicinity of 100mv. On the basis of a proposed sodium shift mechanism or a marked increase in the membrane permeability to the sodium ion during the active period, there exists a possible mode of operation. At this point we consider the theoretical aspects of the dynamics of ionic motion as a basis for determining this potential shift.

We assume initially that the concentration of the sodium ion in the interstitial fluid is at a higher value than that in the axoplasm. Extensive investigation has permitted this assumption in our development.(58) If we may further consider only the cation Na and exclude the anions, we postulate that the Na ion is subjected to the action of two forces, one a diffusion force and the other an electric force. We define the mobility u of the cation as the velocity in cm/sec of an ion under a fall of potential of 1 volt per cm.(57) The potential gradient dV/dx is, of course, the change in potential per increment dx, where V, the potential is defined as the work required to move a positive charge from infinity to the reference point in question against the electric field forces exerted by an arbitrary charge q considered to be concentrated at a point r from the reference point in question where the potential is calculated.

The potential at point A, therefore, is expressed as:

Eq. (VII) $$V_A = -\int_{\infty}^{A}\iint_{V} \frac{\rho}{er^2}\, dvdr = q/er_A$$

where ρ is the positive charge density per unit volume.

If a cation were free to move under a potential gradient, its velocity v_c would be: $v_c = udV/dx$ where u is defined as the velocity in cm. per sec. of an ion under a gradient of one volt per cm. The negative sign signifies motion in the direction of decreasing potential. We previously defined $\bar{E}$ as the electric field force acting on a unit charge and equal to q/er^2 and since $E = -dV/dx$, (9) the force acting on a mole of cations is:

$$F_1 = F_c dV/dx$$

where F_c equals 96,500 coulombs per chemical equivalent. The force F_1 will be expressed in terms of volt-coulombs per cm. per mole of univalent cations.

We may express the ratio of the ionic velocity v_c to the absolute value of the electric force per mole F_1 which ratio may be written as u/F_c. When any other force is applied, the product of this ratio and the applied force will equal the resultant velocity of the mole of cations, (14) assuming that the resistive force function is the same in each instance.

Consider a thin element of volume Δdx where A may represent 1 cm.^{2} of surface area of the nerve membrane and

dx, an increment of thickness. It is further assumed that in view of the physical concentrations of sodium, that an osmotic pressure gradient exists in the same direction as the electric force field.

The osmotic pressure gradient is -dP/dx while the Einstein relation for the diffusion force is adP. This latter force should be equal and opposite to the force required to prevent osmosis.(14) In the volume considered let c be the concentration in moles per cc. The diffusion force is exerted on cadx moles of cations and the diffusion force per mole is then -dP/cdx.

Providing Van't Hoff's Law can be applied in the case of physiological solutions, the partial osmotic pressure due to the Na ions, P = RTc and thus dP/dx = RTdc/dx where R and T have their usual significance. Thus the osmotic force per mole is -RT/c x dc/dx. We then calculate the velocity component due to the osmotic force as:

$$(v_c)_o = -u/F \cdot RT/c \cdot dc/dx$$

Thus the actual velocity of the cations must be the sum of the velocities due to the electrical osmotic forces:

$$v_t = -udV/dx - uRT/Fc \cdot dc/dx$$

Now the number of moles of ions passing through a surface, n, is a function of velocity, concentration, area and time. This is expressed as:

$$dn = -uadt (cdV/dx + RT/F \cdot dc/dx)$$

By a proper conversion, the preceding equation becomes an expression for the ionic current density for the Na ions.

Eq. (VIII)

$$I_{Na} = (F/a)dn/dt = - u (Fc\, dV/dx + RT\, dc/dx) .$$

which equation is identical with the equation developed by Goldman in his treatment.[43]

This equation implies that the diffusion and the electric field forces should establish an ionic current. The equation as it stands could be used to determine the potential across the membrane providing the necessary boundary conditions were known. One difficulty here is the determination of the membrane thickness, the investigation of which is still in the early stages.[44] From a knowledge of the gradient and the thickness, the potential difference would be simple to calculate.

It was noted by this writer, in his review of the literature, that the membrane capacitance was reported not to change appreciably during activity.[42] If we accept this idea of a constant capacitance we have in effect a simple means to check the magnitude of the potential which is due to a transfer of sodium ions.

By means of the usual relationship, $Q = CV$, we have by direct differentiation, rearrangement, and integration the relation

Eq. (IX-a) $$V = 1/C \int_{q_2}^{q_1} dq = (q_1 - q_2)/C$$

where $(q_1 - q_2)$ equals the charge transported by the sod-

ium ions during the period of the rise of the action potential. A period of 0.456 milliseconds and a membrane capacitance of 1.2 micro farads/cm.^{2} was used in these calculations, based on values from Hodgkins and Katz.[47] The expression for the potential as a function of the ionic current and capacitance is finally expressed as:

Eq. (IX-b)

$$V = \frac{(\text{Na ions}/t_1\text{-}t_2)/\text{cm}^2/6.28\times10^{18}\ \text{ions/coul.}}{1.2\mu\text{F}/\text{cm}^2}$$

In a second consideration we may draw an analogy to a series resistance capacitance circuit. The literature gives a membrane resistance of approximately 1200 ohms per cm.^{2} in the resting state. Both Curtis and Cole[42] state that a membrane resistance change occurs with activity. However, on the basis of the work Curtis and Cole did, this writer disagrees that this is a resistance change but a total impedence change due to a variation in the frequency of the current of stimulation which was employed. From a consideration of alternating current theory this is readily understood since in a series or parallel resistance capacitive circuit, the impedence will decrease with an increase in the frequency. The writer tends to take the view expressed by Rober[59] that the plasma membrane offers a great resistance to flow of electrolytes. The writer postulates therefore that the ionic flow shall be regarded in a d.c. sense with a minimum membrane re-

sistance of 1200 ohms/cm^2.

Consider a condenser in series with a pure resistance element R where the capacitance has a value of 1.[illegible]x10^{-6} farads/cm^2 and R equal to 1200 ohms/cm^2. We desire to determine the voltage required to discharge the circuit in 0.456 millisec when a given charge is transferred. This relationship is readily developed from a consideration of the well known equation:

$$I = dq/dt = (V/R)e^{-t/RC}$$

and upon integration within the limits of t_1 and t_o, the results:

$$q = -CV_e^{-t/RC} \Big]_{t_o}^{t_1}$$

or,

$$q = CV(1-e^{-t_1/RC})$$

and the voltage required will be:

Eq.(IX-e)
$$V = q/C(1-e^{-t_1/RC})$$

When proper substitution has been made with a value of t_1 equal to 4.[illegible]x10^{-4} seconds, the equivalent of the rise time of the action potential, with the aforementioned R and C values, the following relationship governs:

$$V = 3.70[illegible]/C$$

(C) Computations

The required q value in both cases may be readily evaluated by the following method. The procedure which was followed in the laboratory for the determination of the

number of sodium ions which transit the membrane area of $1cm^2$ per stimulus has been outlined in Section II. We now define the terms which will be used in the final expression for magnitude of the sodium transfer. Let:

$(dn/dt)_5$ the count rate of the stimulated nerve sample at time t_5,

$(dn/dt)_6$ the count rate of the control nerve sample at time t_6.

$(dn/dt)_7$ the count rate of 1 ml. of the radioactive bath solution at time of t_7.

The time of reference shall be that time at which the stimulations of the nerve section were terminated for each experimental run and designated t_0. Thus:

(t_1-t_0) the time interval for determination of the decay factor, where 1 may take values 5,6,7.

$e^{a(t_1-t_0)}$ the correction factor for radioactive decay where a is the decay constant or probability factor. This value is multiplied into all count rates to compare them at the reference time to

w^c The wet weight of a control nerve section in mg.

w^s The wet weight of a stimulated nerve section in mg.

ΣA_f The total surface area of the nerve fibres in a nerve section. The product of the number of fibres, mean fibre diameter and section length. Thus,

ΣA_f (# fibres) ($\pi \bar{D} l$)

N_s The total number of stimuli delivered to the nerve section via the electrodes.

For ease of handling in the equations we shall call the correction factor for the count rate for the stimulated nerve section f_1; for the control section f_2, and the factor for the bath solution count rate f_3.

$(Na)_{bs}$ The number of sodium ions present per ml. of bath solution.

The number of sodium ions adsorbed by the control section per mg of wet tissue is expressed as,

Eq. (X) $$(Na)_{bs} \cdot (dn/dt)_s f_2 \;/\; (dn/dt)_\gamma \cdot f_3 \cdot w^c$$

While the number of sodium ions present in the stimulated nerve section upon completion of the run will be,

Eq. (XI) $$(Na)_{bs} \cdot (dn/dt)_s \cdot f_1 / (dn/dt)_\gamma \cdot f_3$$

The number of sodium ions which are adsorbed on the surface of the stimulated section are assumed to be calculable on a weight basis. For nerves of comparable diameter such as the stimulated and control sections were in this case, this assumption is justified. Since, if we consider b as the volume density of nerve tissue, the weight of a nerve section is,

$$= (b\,\pi\, r^2 l) = (2\pi r \cdot \tfrac{r}{2}\,\pi r l) = k \cdot \text{surface area}$$

and since the adsorption is a function of surface area exposed, all other factors acting equally, we may validly say that the adsorption of ions on the surface is in direct proportion to the weight of a nerve section. On this basis, the number of sodium ions adsorbed by the stimu-

lated nerve section may be expressed as:

Eq. (XII) $(Na)_{bs} \cdot (dn/dt)_6 \cdot f_2 \cdot \pi^2 / (dn/dt)_7 \cdot f_3 \cdot \pi$

The final expression for the number of sodium ions which transit the nerve membrane per cm^2 per stimulus is as follows:

Eq. (XIII)

$$(Na)_{bs} \cdot \left[(dn/dt)_5 f_1 - (dn/dt)_6 f_2 \pi^2 / \pi^0 \right] / (dn/dt)_7 f_3 \delta A_f$$

The data tabulated in Section VIII B-2 was calculated on the basis of the forgoing relationship.

GENERAL CONSIDERATIONS

The question may well be raised as to the possible effect the beta and gamma radiation of the bathing solution has on the nerve section under stimulation, and might not that radiation be a factor pertinent to the results as observed and computed. This problem may be answered in consideration of two points. The first point is that a control nerve section was immersed with the section under stimulation for the same period of time and subjected to the same radiation dose. Any change in uptake, due to an increase in membrane permeability, would reflect itself in the control section as well as the stimulated nervous tissue. The second consideration is that with reference to the low degree of sensitivity of nerve tissue to any

form of radiation, particulate or electromagnetic. As evidence of this we refer to the work of Dr. M. A. Rothenberg on permeability changes in nervous tissue as a result of irradiation with X-rays. He found that at a dose of 80,000 roentgens there was no statistical significance between the uptake of control and experimental tissue. He had to increase the dose to 125,000 R. before there was any statistical significance between the control and the experimental sections.(80) When these doses are compared to the maximum upper limit value which was computed in Section II, there is little reason to believe that the radiation had any significant effect on the permeability characteristics of the nerve tissue or any resultant effect on the results which have been attained.

From an analysis of the computed and observed results of this experiment, the initial point of inquiry is fairly well established. There is little doubt that a sodium ion transfer takes place during the nerve conduction process. With each sodium ion we have an associated charge and on consideration of the time factor involved, it follows that a current exists.

The point might be considered as to the barrier effect which the myelin sheath might exert on this ionic transfer and in particular, in this case where multi-fibred nerve was employed, the barrier effect of the connective tissue matrix between bundles in a trunk and in addition the en-

doneureum of the fibre bundles. In this regard, Feng and Liu [61] believe on the basis of their investigations that connective tissue does present an effective diffusion barrier to an ion migration. However, Lorente de No [18] states with no reservations:

> "It is difficult to believe that the connective tissue sheath of frog or bull frog nerve could act as an effective diffusion barrier that would delay for any period of time the penetration of ions into the nerve."

When one considers the ionic radius of the Na ion, which is approximately 0.95 Å, and the clearances of the stroma of connective tissue which may well be hundreds of times larger, one is inclined to agree with deNo. However, judging purely on the geometrical considerations, there is bound to exist a partial barrier to penetration no matter how slight.

With reference to the membrane surrounding the fibre, the situation is slightly modified. Schmitt and Palmer [62,63] have investigated the nerve sheath by means of X-ray diffraction studies, the findings of which bear on our problem. The sheath is believed to be composed of layers of mixed lipids wrapped in a concentric manner about the axoplasm or central cylinder. It is believed that protein elements alternate with lipoid micelles layer for layer, and that the protein and lipid is in a micelle form with a definite orientation in a radial direction. The equatorial spacing is said to be on the

order of 17 Å and the meridianal spacing is about 5 Å. On a purely geometrical consideration, disregarding a charge on the membrane, an atom of Sodium should have little difficulty transiting the membrane with about the same ease as a baseball going through an open window. The thickness of this nerve membrane will, of course, vary with size but the literature often quotes the thickness in the range of 100-170 Å.

It will be recalled from Section I, that until the year 1940, the magnitude of the resting potential was thought to limit the magnitude of the action or spike potential. It was believed, and this portion of the theory is still considered valid, that the concentration of internal and external Potassium was responsible for the resting potential, the magnitude of which, for most studies, was reported in the vicinity of 60mv. The polarity of the potential was such that the membrane was positive with reference to the internal axoplasm in the resting state. As shown in diagram A-1 of the Appendix, on activity, the membrane not only goes to zero, it passes through and assumes a negative potential with respect to the inner core. This phase shift leaves us with some 100 mv to account for. This is quite evident by inspection of a reproduction of the spike potential which Curtis and Cole observed in the squid single fibre giant axon internal and external set up.

The idea of Potassium leakage from a fibre has been

reported by many observers through the years.[14,34] This is in support of the membrane hypothesis as we defined it. In addition, changes in the potassium concentration in the external bath solution of the nerve has resulted in a marked decrease of the magnitude of the action potential with an increase in the external potassium concentration. However, with the phase reversal and the magnitude of the action potential to be considered the original membrane hypothesis fails.

The reversal of the membrane potential can be explained on the basis of the sodium hypothesis as advanced by Hodgkin and Katz.[47] It is assumed that in the resting state, the nerve membrane is selectively permeable to the potassium and not to the sodium ion. During activity, this selective permeability shifts with the membrane becoming permeable to the sodium. They support their hypothesis in light of experimentation wherein by a variation of the external bath solution concentration of sodium, the height of the action potential was proportionately affected. When isotonic solutions containing a decreased sodium concentration were applied it was found that solutions of less than 50% of the normal sodium concentration caused the magnitude of the reversed potential to be zero. Likewise, the height of the action potential was increased by an increase of the sodium concentration above the normal. From the results of their work, it is indicative that the

Sodium shift hypothesis has a good foundation.

The experimental phase of this research supports the work of Hodgkins and Katz in that a definite ionic transfer was noted. However, in the problem of correlating the magnitude of that transfer it was necessary to draw the parallel in electrical circuitry, following Cole's lead.(46) It is fully realized that any explanation of this type is certainly not unique nor should it ever be so considered in biological experimentation. It will be noted in Tables I and II and in the summary of computed data of the Appendix, that there is some force function, perhaps not fully nor completely defined by our equations nor understanding, at work within certain time limitations. The writer agrees with Cole to the extent that when the problem is transferred into physical theory of electrical circuits we have at least a technique for mathematical analysis.

In our case we first applied the idea of a membrane of pure capacitance and negligible resistance. It was noted from the computed values that the answer was not here in magnitude at least. When we considered the resistance capacitance circuit, the magnitude of the computed values came closer to that desired magnitude.

The point might well be raised as to why the writer made the assumption that the Sodium transfer was specific to certain time limits such as the rise time of the action

potential.The answer can be had on the basis of Hodgkins and Katz's work.Our objective was to show a magnitude correlation in view of the assumption that an ionic current does flow during the rise time period. The writer had to make this assumption for computational purposes. However, on the basis of the membrane theory it does logically follow that this transfer would be a function of time. When Hodgkins and Katz showedthe dependence of the magnitude of the potential reversal on the concentration of the Sodium in the bathing solution, it followed that an agent acted during the period from the zero potential value to the maximum of the negative swing, the time which is called by the improper term "rise" time.

The exact nature of the mechanism of action of the membrane selectivity is not too well known and is in consequence, the subject of much speculation. Danielli and others (65) have treated this matter in great detail. There is no doubt in this writer's mind that metabolic function enters into the picture at this point. Many factors point to this, such as the effect of low oxygen content in vicinityoof an active nerve. As a result, the action potential and conduction velocity fall far from normal. In addition, there is the work of Shanes et al (66) which shows an adverse effect on the resting membrane potential when the nerve is bathed in a solution containing metabolic inhibitors.

It has been noted earlier, as shown by curves 6-2(a) and (b), that there is a reversal of the sodium shift mechanism after a certain period of time. In the case of the nerve sections from the subject group of Rana pipiens this occurred at 33'20", and in the second group Rana catesbiana the results show a decreased uptake and a lowering of the ionic current flow after 16'40". It may be pointed out that the only two cases of zero uptake or negative flow were computed from data from runs of 50' stimulation time. It is evident from the results that the uptake and ionic current falls after a certain period of time. Perhaps the concentration gradient suffers a significant change during long periods of stimulation or possibly the metabolism of the nerve is suffering from an unbalance due to a disproportion of ions. However difficult to describe, some force is operating and a reverse Sodium shift is apparent after a certain time.

If we considered the possibility of a membrane inductance element as was proposed some time ago by Cole, in order for the relationship,

$$L di/dt + Ri + q/C = 0$$

to apply to a situation of a non oscillatory case, it would require a parameter relationship of the following nature. Where R/L would be greater in magnitude than $2/(LC)^{\frac{1}{2}}$. By selecting various values of membrane resistance which we might consider, for a capacitance value of

1.2×10^{-6} farads/cm^2, we would have the following inductance requirements.

Resistance in ohms/cm^2	Inductance in millihenries
1000	.600mH
500	7[illegible].0mH
25	.187mH

However, the idea of a membrane inductance element is not too plausible in view of the constituents of the membrane.

At the present time, Curtiss and Cole treat the mechanism of conduction on the basis of the circuit analogy. Referring to Diagram A-3 of the appendix, it is imagined that the nerve cell membrane is composed of a series of circuit elements as shown. During the resting phase all condensers are at the same potential and there is no current flow. When for any reason, the membrane permeability, which is the "resistance" of the electrical circuit, and the emf of unit "A" changes, then the condenser in this unit will discharge. The adjacent condenser will discharge through the external and internal resistances. This will repeat itself all along the nerve fibre resulting in a conducted impulse. Both Curtiss and Cole depend on the metabolic function to restore the membrane to its resting state in the same manner as we mentioned earlier.

In closing the discussion it may be said that the findings of this work support the hypothesis of Hodgkins and Katz with reference to the Sodium shift and its correl-

ation with the magnitude of the potential of action. While the values of the computed potentials arising from the analogy drawn on the basis of a resistance capacitance circuit do not approach the required [illegible] my magnitude, there is a strong inference that a parametrically similar biophysical phenomenon is functioning.

SECTION V [illegible]

Theoretical considerations predict the existence of an ionic current across a permeable membrane which separates two unequal distributions of the same cation, as a result of the action of a diffusion force and an electric field force.

The inadequacy of the Bernstein membrane theory of the nerve conduction process has been corrected by a modification advanced by Hodgkins and Huxley to explain the phase reversal and the magnitude of the action potential of the nerve. The resting nerve is held to be selectively permeable to potassium ions and impermeable to the sodium ion. During the activity, it is believed that this selective permeability of the nerve membrane shifts to favor the sodium ion. The modification predicts a reversed membrane potential on the basis of this sodium shift, providing the external concentration of sodium is greater than the internal concentration.

The object of this study was to investigate the existence of a sodium transfer across the nerve membrane of myelinated nerve during the conduction process and to further correlate the magnitude of this ionic current and that of the associated action potential taking into consideration accepted values of the membrane parameters of resistance and capacitance.

The multifibred sciatic nerve trunks of two separate subject groups were used for this study. 14 adult leopard frogs (Rana pipiens) and 14 adult bull frogs (Rana catesbiana). The usual radioactive tracer techniques were employed in the determination of the amount of sodium taken up by nerve sections, utilizing the isotope Na^{24} in isotonic cold-blooded Ringer's solution. Nerves were stimulated at a rate of 100 per second for three different time intervals. Normal control sections were used and separate surface adsorption studies were made for resting sections of both subject groups on the basis of the time of immersion.

The results attained by the experimental study were:

1. A positive uptake of sodium per mg. of wet tissue was determined for 24 of the 28 cases under study. The uptake was linear with respect to time in the range from zero to 45'00". After the 30'00" period a reverse shift was noted with a marked decrease in uptake. The two negative results fell in the 30' range.

2. The number of moles of sodium entering the section per stimulus averaged 1.772×10^{-12} moles/stimulus /cm^2 during the 0-15'00" time interval. On the basis of a rate of entry per second during the rise-time period, $.9 \times 10^{-11}$ moles of sodium transited the membrane/cm^2/sec.

3. The existence of an ionic current was shown to exist in 24 out of 28 cases under study. In the first

subject group, in the interval from 0-[illegible]'20", this current averaged [illegible].075mA./cm^2.

4. When the membrane is considered as a simple condenser circuit with negligible resistance, the average potential difference, computed on a charge capacitance relationship for the first subject group in the time interval from 0-[illegible]'20", is 14.27mv.

5. When the membrane circuit is considered as a resistance capacitance setup in series, the average potential difference, computed on a resistance capacitance and time basis, is for the first subject group 58.97 mv.

On the basis of this experimental work, the following conclusions are reached:

1. An ionic current does exist across the membrane of the nerve fibre during the conduction process as predicted by Hodgkins and Katz.

2. The rate of entry as determined by these investigations was calculated to be .29x10^{-11} moles of Na./cm^2 /sec during the rise period. This is in agreement within a factor of 4 with the theoretical value of 8.4x10^{-11} moles/cm^2/sec as computed by Hodgkins and Katz.

3. While the potential considerations of a membrane resistance capacitance circuit yield only a potential value of 58.97mv., only half that required to account for the magnitude of the negative portion of the action or spike potential, it is felt that a parametrically similar

biophysical system is in operation.

4. From the data obtained, there is an indication of a sodium shift reversal after a certain stimulation time and period of nervous activity.

All points considered, these findings support the proposed modification to the membrane theory as advanced by Hodgkins and Katz.

SECTION VI BIBLIOGRAPHY

1. Luydam, V.A. — Fundamentals of Electricity and Electromagnetism, D.Van Nostrand Co.,Inc. (1949)

2. Cole, K.S. — Four Lectures on Biophysics,Instituto De Biofisica, Universidade do Brasil. (1947)

3. de No, R.L. — Studies from The Rockefeller Institute for Medical Research, 131,2. (1947)

4. Angerer, C.A. — Unpublished Notes of Lecture delivered by Dr. Angerer at the Ohio State University (1950)

5. Curtis,H.J. and Cole, K.S. — Transverse Electric Impedence of Squid Giant Axon. J.Gen.Physiol. 22:671. (1949)

6. Hardesty, I. — The Number and Arrangement of the fibres forming the spinal nerves of the Frog.,Univ.of Chicago Press.

7. Neilbrunn,L.V. — An Outline of General Physiology, W.B.Saunders Company, Ch.3,5,21.

8. Curtis,H.J. and Cole, K.S. — Nerve: Excitation and Propagation Medical Physics, I, 800, (1947)

9. Skilling, H.H. — Fundamentals of Electric Waves, John Wiley and Sons,N.Y. (1948)

10. Cole, K.S. — Electric Excitation in Nerve; Cold Spring Harbor Symposia on Quantitative Biology, Vol.1,131, (1933)

11. Adrian, A.D. — The Mechanism of Nervous Action, Univ. of Penn.Press. (1932)

12. de No, R.L. — Studies from The Rockefeller Institute for Medical Research, 131, 283. (1947)

13. Curtis, H.J. and Cole, K.S. — Membrane Resting and Action Potentials from the Squid Giant Axon. J.Cell. and Comp. Physiol., 19.135. (1942)

14. Kober, S. — Physical Chemistry of Cells and Tissues, Ch. 17,218, The Blakiston Co.

15. Cole, K.S. and Curtis, H.J. — The Electrical Impedance of the Squid Giant Axon during activity. J. of Gen. Physiology, 22, 649. (1939)

16. Hodgkin, A.L. — The Action of Potassium and other ions on the injury potential and action current in Naia nerve. Proc. Royal Soc., B115, M10. (1934)

17. Bernstein, J. — Zur Theorie des electrischen Reizes, Arch. ges. Physiol., 191, 475.

18. Boothout, V. and Tuttle, E. M. — Textbook of Physiology, 10th Ed. p.184

19. Steinbach, H.B. — The Squid, The Scientific American, 184, No. 4, p.dd. (sp.1951)

20. Gasser, H.S. — Axon action Potentials in Nerve, Cold Spring Harbor Symposia on Quantitative Biology, Vol. I, 130. 1933

21. Adam, N.K. — The Physics and Chemistry of Surfaces, p.359, The Clarendon Press Oxford. (1938)

22. Beutner, R. — Physical Chemistry of Living Tissues and Life Processes.(1933) Williams and Wilkins Co.

23. Beutner, R. and Carman, P.C. — The Electrochemical Activity of Substances occurring in Nerve. Abstracts of Communications: First Internal. Cong. of Biochem. p.201.

24. Gasser, H. and Lucas, K. .

[illegible] of the action current in nerve. Reprint from the Advancements of Investigations of the XVIII International Physiological Congress, Copenhagen (1925)

25. Gasser, H. and Lucas, K.C.

A new concept of the compound nerve action potential as applied to the electrophysiology of nerve, Physiological Proceedings, 2, p.1. (April 1926)

26. Gasser, H. and Lucas, K.C.

Propagated nerve impulses. The Physiological Record, 40, p. 4. (August 1926)

27. Gasser, H.S. and Erlanger, J.

The origin of the spike potential in nerve. Am.Physiological Proceedings, 2, p.1. (Dec.1926)

28. Gasser, H.S. and Newcomer, H.S.

On the form of the action potential in nerve. J. Physiol., 66, 26

29. Gasser, H.S. and Erlanger, J.

Electrical signs of nervous activity. Univ. of Penn. Press. (1937)

30. Gasser, H.S.

Control of excitation in the nervous system. Harvey Lectures. 32: 169. (1937)

31. Gasser, H.S.

Fiber size and potentials. Amer. J. Physiol. 115, 148-170. Nov.1936

32. Gasser, H.S. and Grundfest, H.

Axon diameters in relation to spike dimensions and conduction velocities in mammalian fibers. Am. J. of Physiol. 127, 393-414, (Sept.1939)

33. Hill, A.V.

Propagated action and nervous activity, Univ. of Indiana Press (1936)

34. Hu Fu, C.

Studies from the Rockefeller Institute for Medical Research, Vol.144.

35. Hill, A.V.

Chemical wave transmission in nerves. Cambridge Univ. Press, Cambridge. (1932)

36. Gerard, R.W. — Nerve Metabolism, Physiol. Rev., 11,469

37. Chance, A.M. and Brown, H.M. — The Effect of Metabolic Inhibitors on the Resting Potential of Frog Nerve, J. of Cell. and Comp. Physiol.,19:1

38. Rashevsky, David — Studies in Permeability in Relation to Nerve Function, Biochimica et Biophysica Acta. 4. (1950)

39. Barnes, T.C. — The Chemical Origin of Electrical Energy in the Nervous System. Reprint Euclides, Vol.X, Madrid,(1950)

40. Eyring, H. and Johnson, F.H. — The Theory of Potential in Nerve and Electric Organs. Abstracts of papers presented at Boston, Mass. pp. 1-9,(1951) Am. Chem. Soc.

41. Cole, K. S. and Curtis, H.J. — Electrical Impedance of Nitella During activity. J. Gen.Physiol. 22:37, (1938)

42. Cole, K. S. and Curtis, H. J. — Electrical Impedance of the Squid Giant Axon During Activity. J. Gen.Physiol. 22:649 (1939)

43. Terman, F.E. and Pettit, J.M. — Alternating Current Circuits, p.405. John Wiley and Sons,Inc.

44. Hodgkin,A.L. and Huxley, A.F. — Action Potentials Recorded from Inside a Nerve Fibre.Nature, 144, 710.

45. Bremer, J.F. and Lewis, F.T. — A Textbook of Histology, C.V. Mosby and Co. p.184.

46. Cole, K.S. — Rectification and Inductance in the Squid Giant Axon. J. of Physiol. 25,29. (1941)

47. Hodgkin, A.L. and Katz, B. — The effect of Sodium Ions on the Electrical Activity of the Giant Axon of the Squid. J. Physiol. 108,37-77

48. Goldman, D.E. — Potential, Impedance and Rectification in Membranes. J. Gen. Physiol. 27. (1943)

49. Teorell, T. — Studies on the Diffusion Effect in Ionic Distribution. Proc. Nat. Acad. Sci., 21,152.(1935)

50. Rothenberg, M.A. — Studies on Permeability in Relation to Nerve Function, Biochimica and Biophysica Acta, Vol.4. (1950)

51. Lea, D.E. — The Actions of Radiations on Living Cells. (1947)

52. Lawrence, J.J. and Hamilton, J.G. — Advances in Biological and Medical Physics, Vol. I, Academic Press, Inc. N.Y. (1948)

53. Hirschfelder, J.O. et al — The Effects of Atomic Weapons. The Supt. of Documents, The U.S.Gov't Printing Office, Washington, D.C.

54. Siri, W.E. — Isotopic Tracers and Nuclear Radiations, McGraw Hill Book Co.

55. Marinelli, L.D.et al — Dosage Determination with Radioactive Isotopes. The Am. J. of Roentgenol. and Rad. Therapy. 59, p.2. (1948)

56. Bear, R.S. and Schmitt, F.O. — Electrolytes in the Axoplasm of the Giant Nerve Fibres of the Squid. J. Cell. and Comp. Physiol. 14,203.

57. Glasstone, S. — Textbook of Physical Chemistry. D. Van Nostrand Co., N.Y.;p909

58. Schmitt, F.O. — Nerve Ultra Structure as Revealed by X-ray Diffraction and Polaroid Light Studies. Cold Spring Harbor Symposia of Quantitative Biology. 4.

59. Weber, H. — Physical Chemistry of Cells and Tissues, p.270. Van Nostrand Co. (1949)

60. Hardesty, I. — The Number and Arrangement of the Fibres Forming the Spinal Nerves of the Frog. Report of the Neurological Laboratory of the Univ. of Chicago.

61. Feng, T.P. and Liu, Y.M. — The Connective Tissue as an Effective Diffusion Barrier. J. Cell. and Comp. Physiol. 34, 1-18. (Aug. 1949)

62. Schmitt, F.O. and Palmer, K.J. — X-ray Diffraction Studies of Lipid and Lipid Protein Systems. Symposia on Quantitative Biology, Cold Spring Harbor, N.Y., 8, (1940)

63. Schmitt, F.O. — X-Ray Diffraction Studies on Nerve. Radiology, 25, (1935)

64. Hodgkin, A.L. and Huxley, A.F. — Potassium Leakage From an Active Nerve Fibre. Nature, 158,367-377.

65. Danielli, J.F. — On The Permeability Change of Stimulated Nerve. J. Physiol. 100,117-124. (1941)

66. Shanes, A.M. and Brown, E.M. — The Effect of Metabolic Inhibiters on the Resting Potentials of Frog Nerve. J. Cell. and Comp. Physiol. 12,1

67. May, K. and Fano, L. — Nuclear Data, Circular of the National Bureau of Standards. No. 499. (Sept. 1, 1950)

68. Pool, M.L. — Personal Communication regarding $T_{\frac{1}{2}}$ of Na^{24} changed from 14.8 to 15.1 hrs. as approved by National Bureau of Standards.

69. Morgan, D.E. — Practical Considerations in Radiation Shielding. Isotopes Division Circular 3-4 (Rev. 1948)

70. Bennett, T.F. and Chilton, A.B. — Unpublished data on a study of the linear absorption coefficients of various material for Gamma emission in the 1.08 to 2.76 Mev. range. 11/20/51, O.S.U., Columbus, Ohio.

SECTION VII. APPENDIX

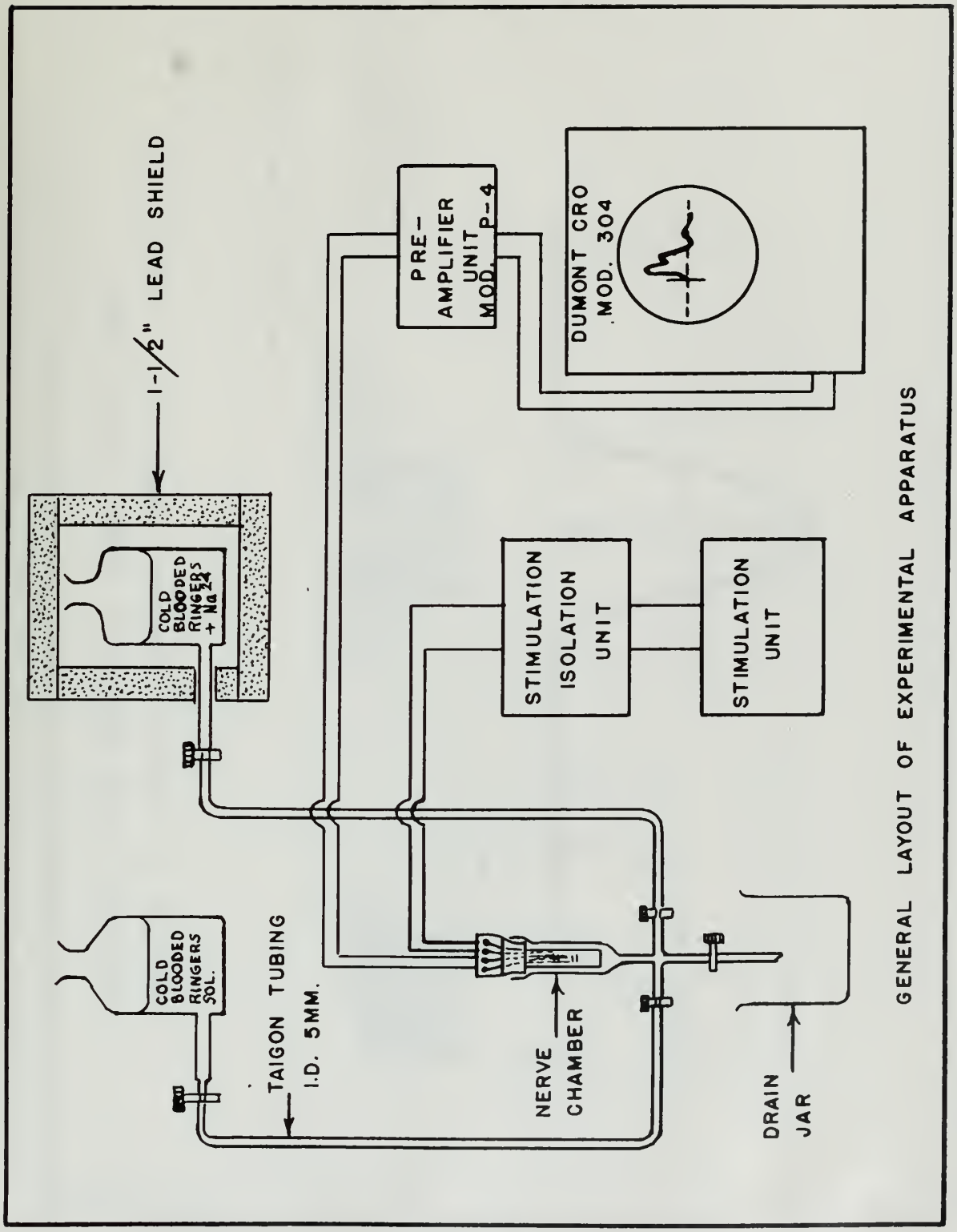

DIAGRAM A-1

PROPAGATION OF AN IMPULSE IN SINGLE NERVE FIBRE,
ACCORDING TO MODIFIED MEMBRANE HYPOTHESIS. GLASSER (47)

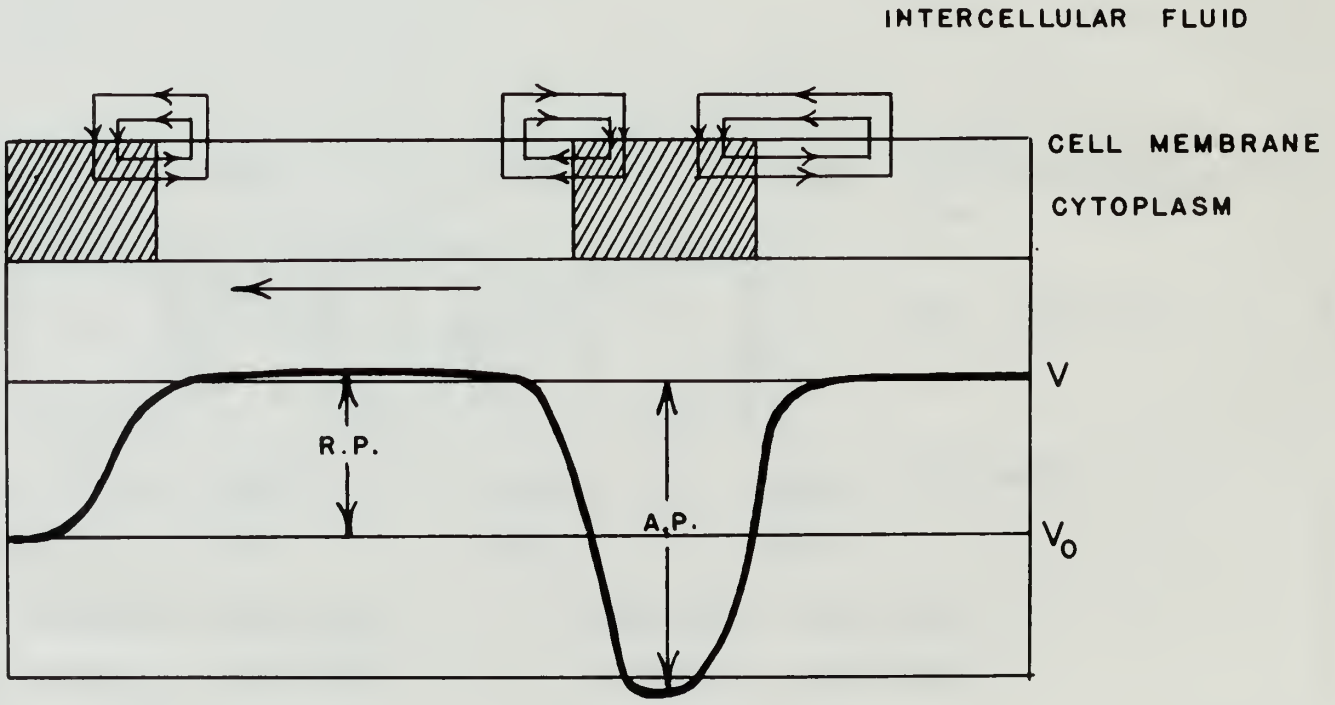

DIAGRAM A-2

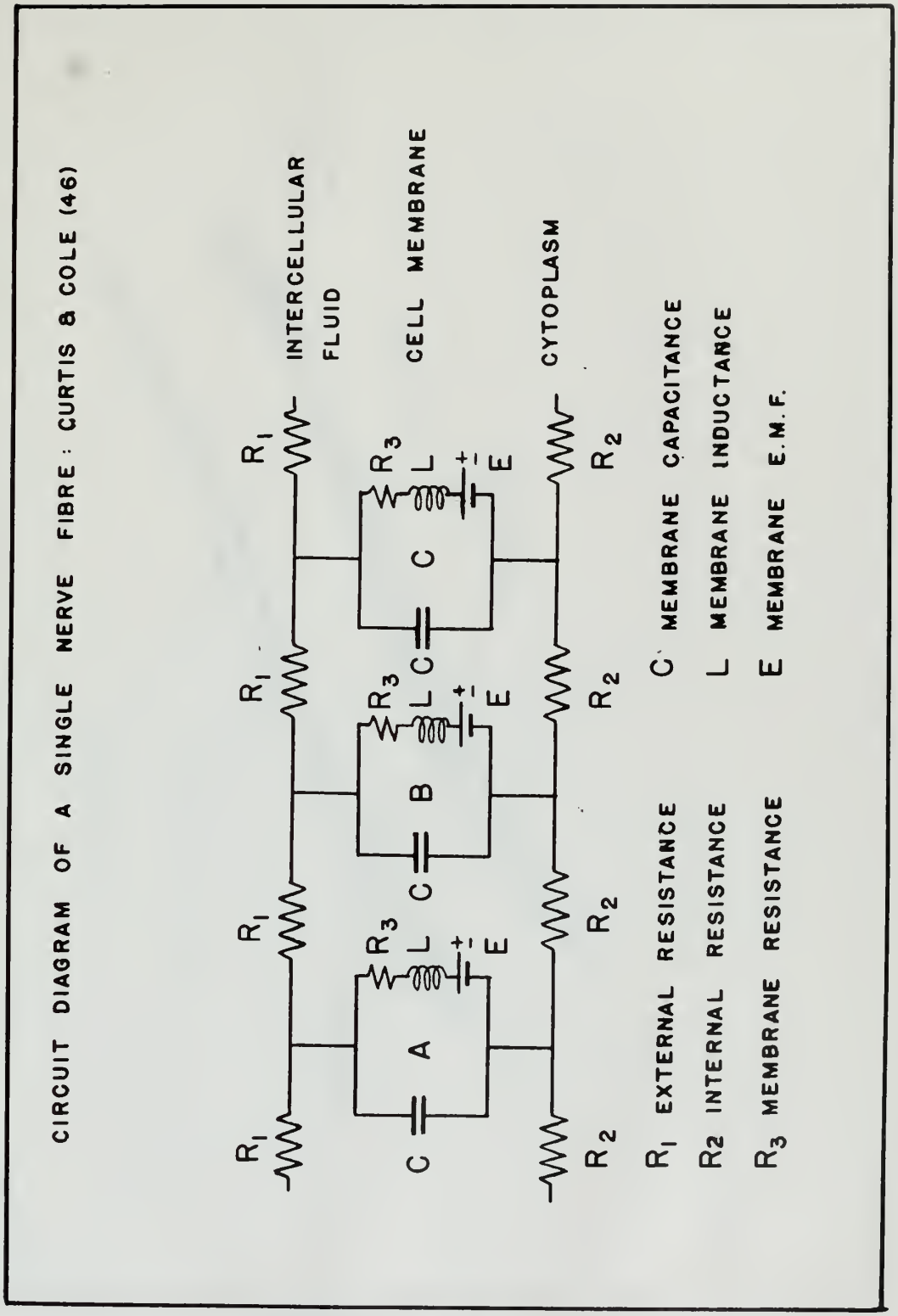
CIRCUIT DIAGRAM OF A SINGLE NERVE FIBRE: CURTIS & COLE (46)
INTERCELLULAR FLUID
CELL MEMBRANE
CYTOPLASM
R1
R2
R3
C
L
E
A
B
R1 EXTERNAL RESISTANCE
R2 INTERNAL RESISTANCE
R3 MEMBRANE RESISTANCE
C MEMBRANE CAPACITANCE
L MEMBRANE INDUCTANCE
E MEMBRANE E.M.F.

DIAGRAM A-3

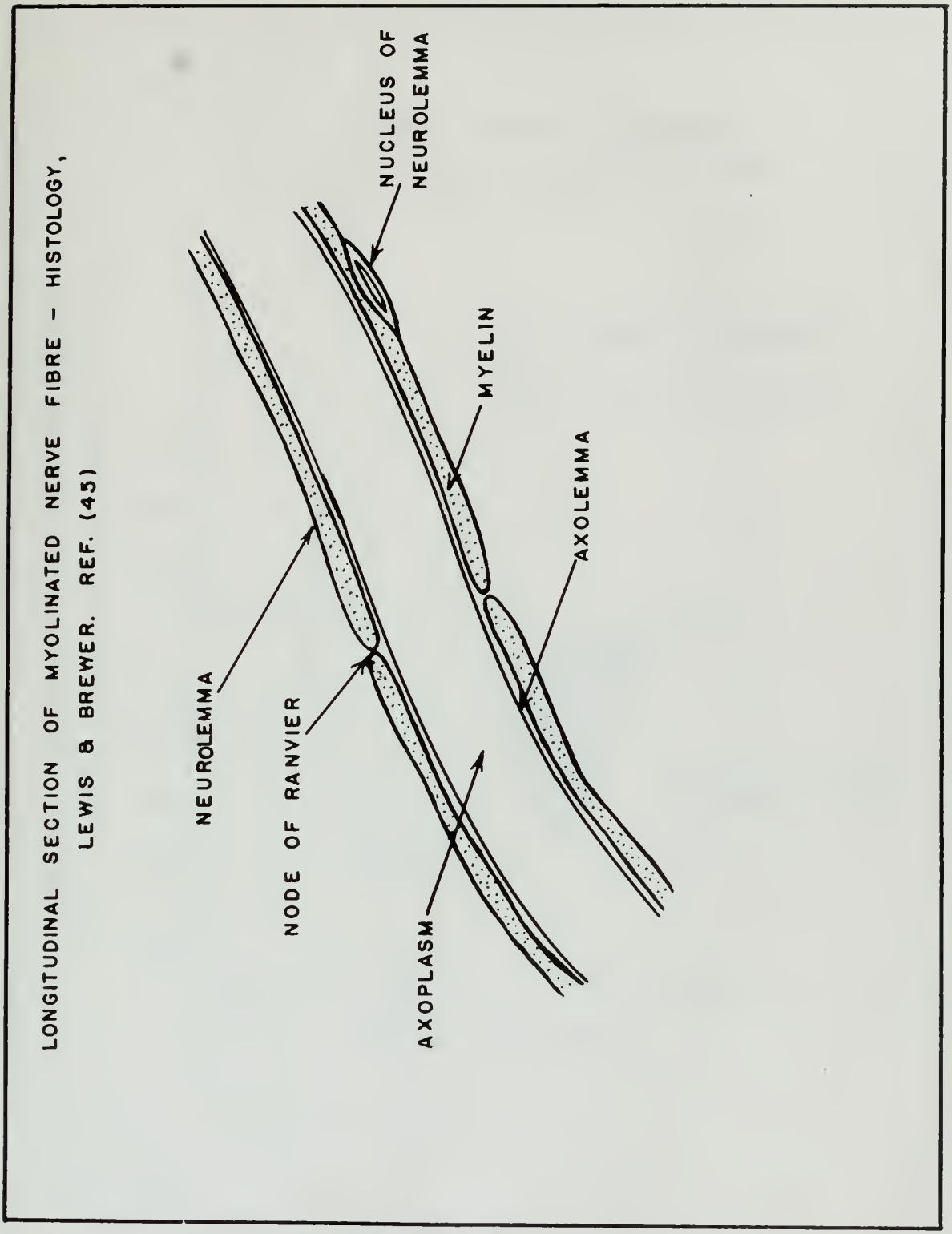
LONGITUDINAL SECTION OF MYOLINATED NERVE FIBRE - HISTOLOGY,
LEWIS & BREWER. REF. (45)
NUCLEUS OF NEUROLEMMA
MYELIN
AXOLEMMA
NEUROLEMMA
NODE OF RANVIER
AXOPLASM

DIAGRAM A-4

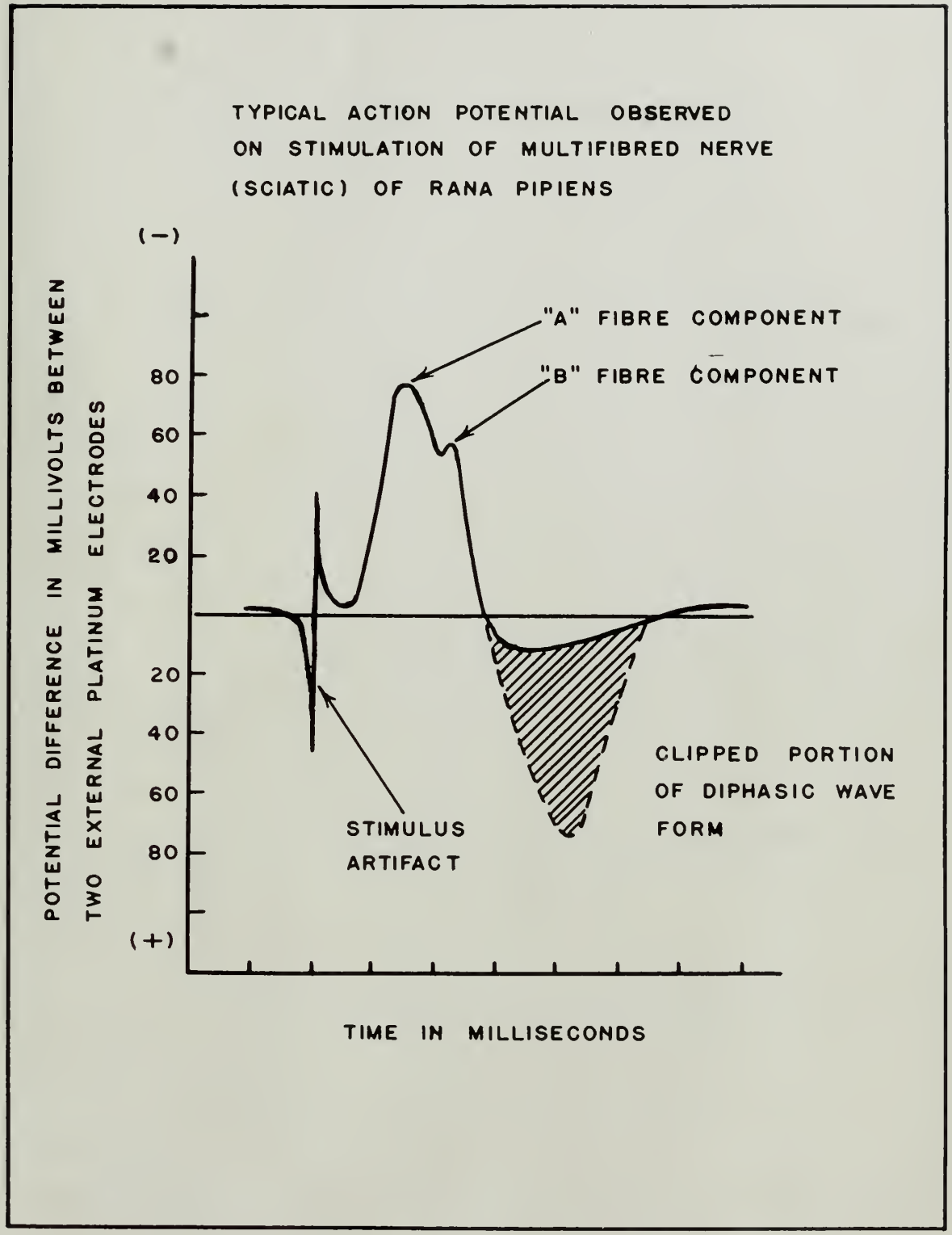
TYPICAL ACTION POTENTIAL OBSERVED
ON STIMULATION OF MULTIFIBRED NERVE
(SCIATIC) OF RANA PIPIENS
POTENTIAL DIFFERENCE IN MILLIVOLTS BETWEEN
TWO EXTERNAL PLATINUM ELECTRODES
(−)
80
60
40
20
20
40
60
80
(+)
"A" FIBRE COMPONENT
"B" FIBRE COMPONENT
STIMULUS
ARTIFACT
CLIPPED PORTION
OF DIPHASIC WAVE
FORM
TIME IN MILLISECONDS

DIAGRAM A-5

ACTION POTENTIAL OF SINGLE NERVE FIBRE
GIANT SQUID AXON: FROM CURTIS & COLE (13)

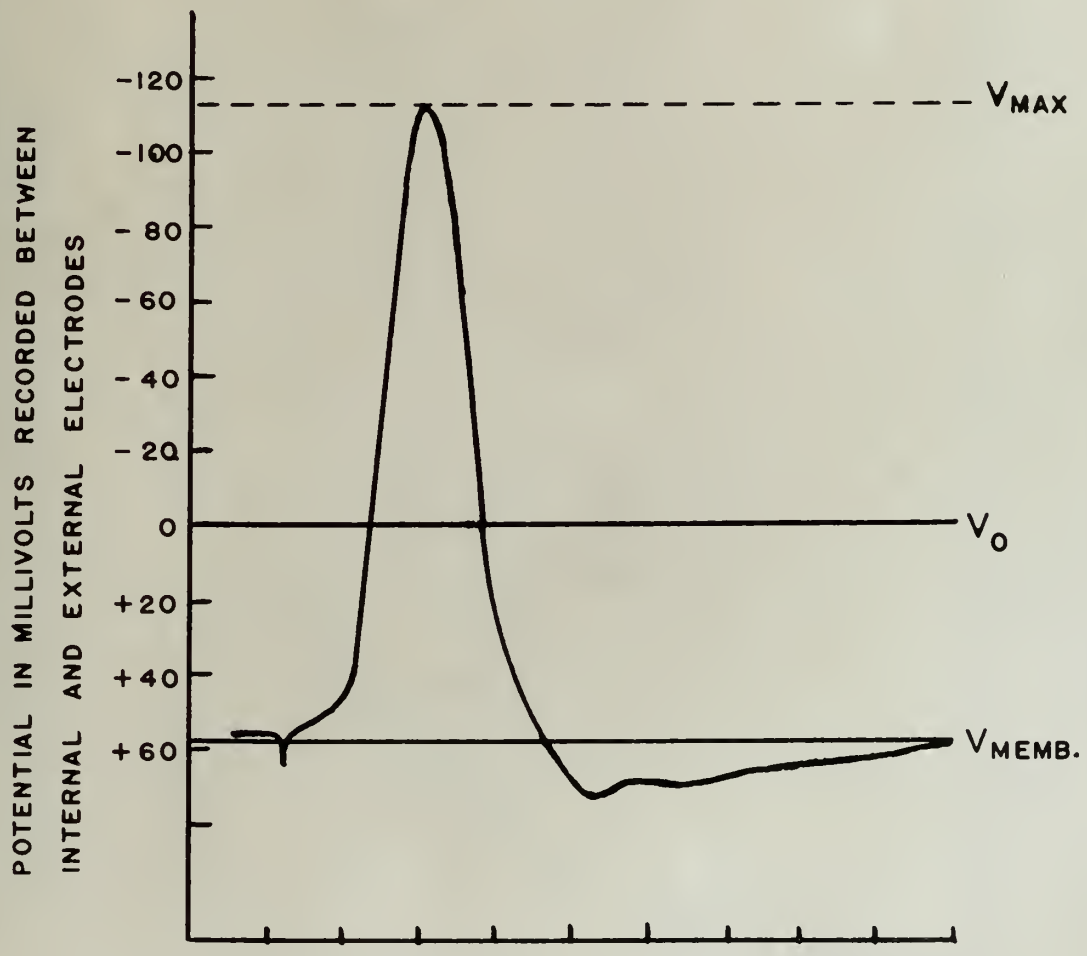

$(V_{MEMB.} - V_0)$ = RESTING POTENTIAL

DIAGRAM A-6

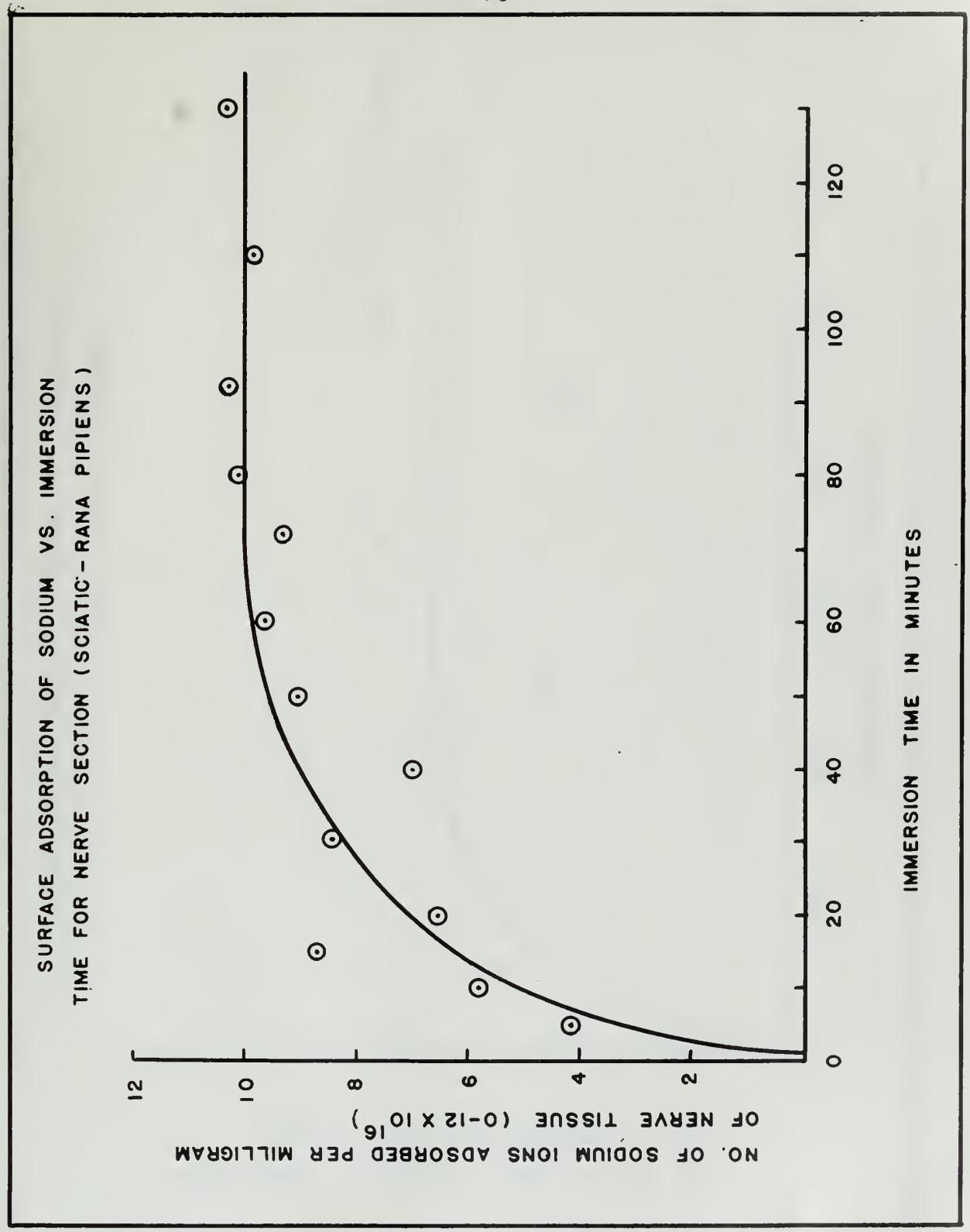
SURFACE ADSORPTION OF SODIUM VS. IMMERSION TIME FOR NERVE SECTION (SCIATIC - RANA PIPIENS)
NO. OF SODIUM IONS ADSORBED PER MILLIGRAM OF NERVE TISSUE (0-12 X 10^16)
IMMERSION TIME IN MINUTES
0
20
40
60
80
100
120
2
4
6
8
10
12

GRAPH NO. B-1 (a)

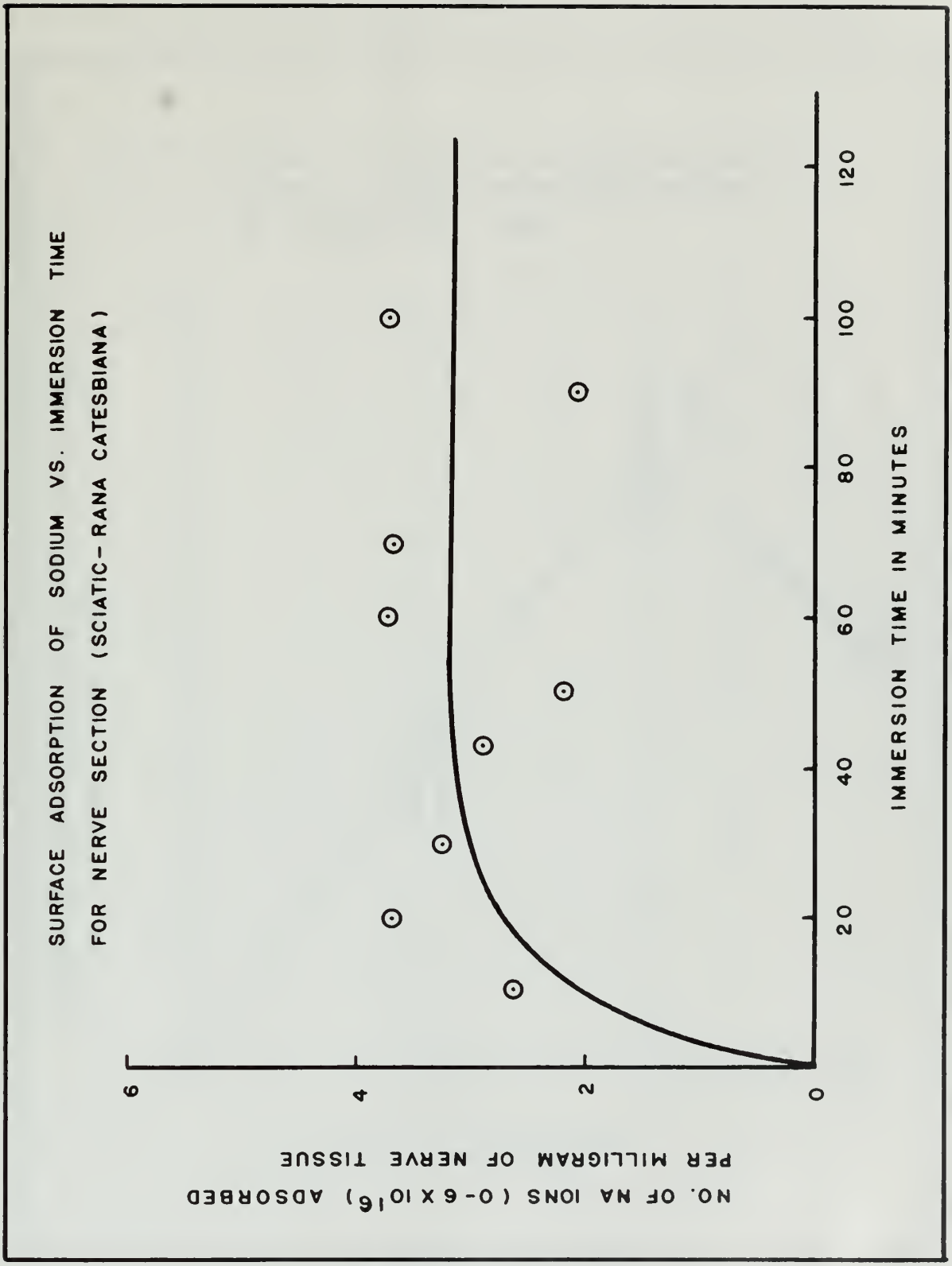
SURFACE ADSORPTION OF SODIUM VS. IMMERSION TIME
FOR NERVE SECTION (SCIATIC- RANA CATESBIANA)
NO. OF NA IONS (0-6 X 10^16) ADSORBED
PER MILLIGRAM OF NERVE TISSUE
0
2
4
6
20
40
60
80
100
120
IMMERSION TIME IN MINUTES

GRAPH NO. B-1 (b)

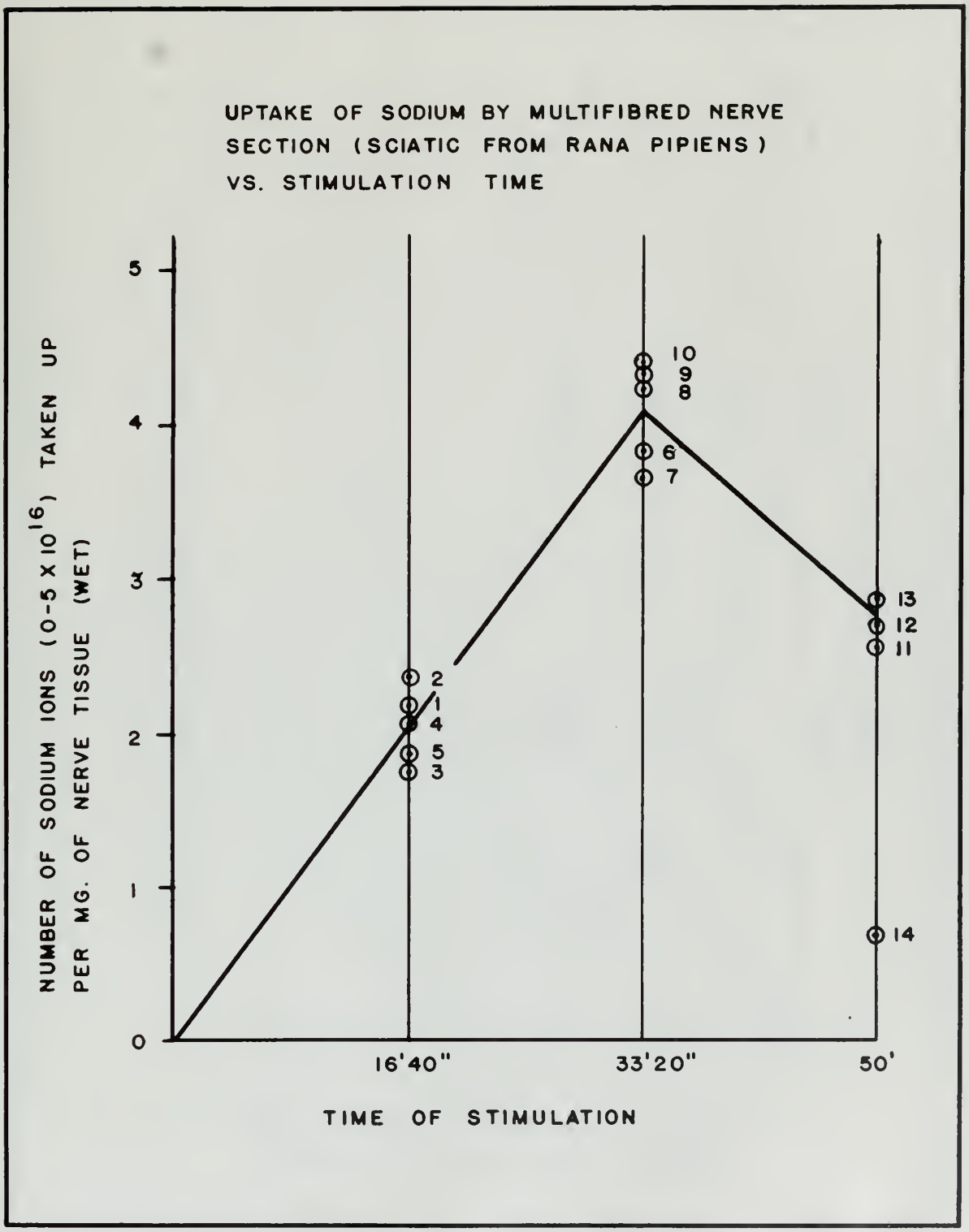
UPTAKE OF SODIUM BY MULTIFIBRED NERVE
SECTION (SCIATIC FROM RANA PIPIENS)
VS. STIMULATION TIME
NUMBER OF SODIUM IONS (0-5 X 10^16) TAKEN UP
PER MG. OF NERVE TISSUE (WET)
0
1
2
3
4
5
16'40"
33'20"
50'
TIME OF STIMULATION
1
2
3
4
5
6
7
8
9
10
11
12
13
14

GRAPH NO. B-2 (a)

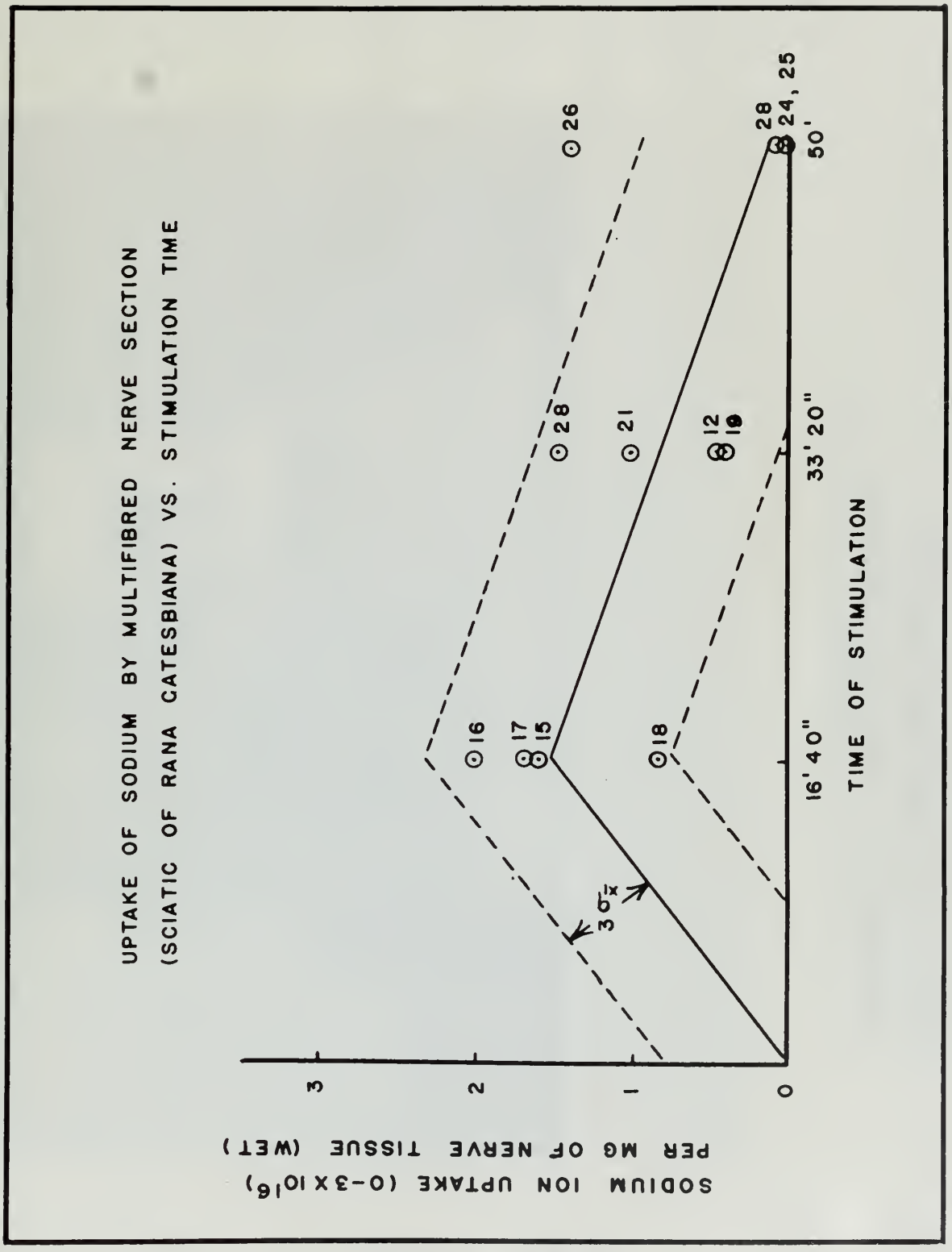
UPTAKE OF SODIUM BY MULTIFIBRED NERVE SECTION
(SCIATIC OF RANA CATESBIANA) VS. STIMULATION TIME
SODIUM ION UPTAKE (0-3X10⁻⁶)
PER MG OF NERVE TISSUE (WET)
TIME OF STIMULATION
16'40"
33'20"
50'
3σx̄
0
1
2
3
16
17
15
18
28
21
26
12
19
28
24, 25

GRAPH NO. B-2 (b)

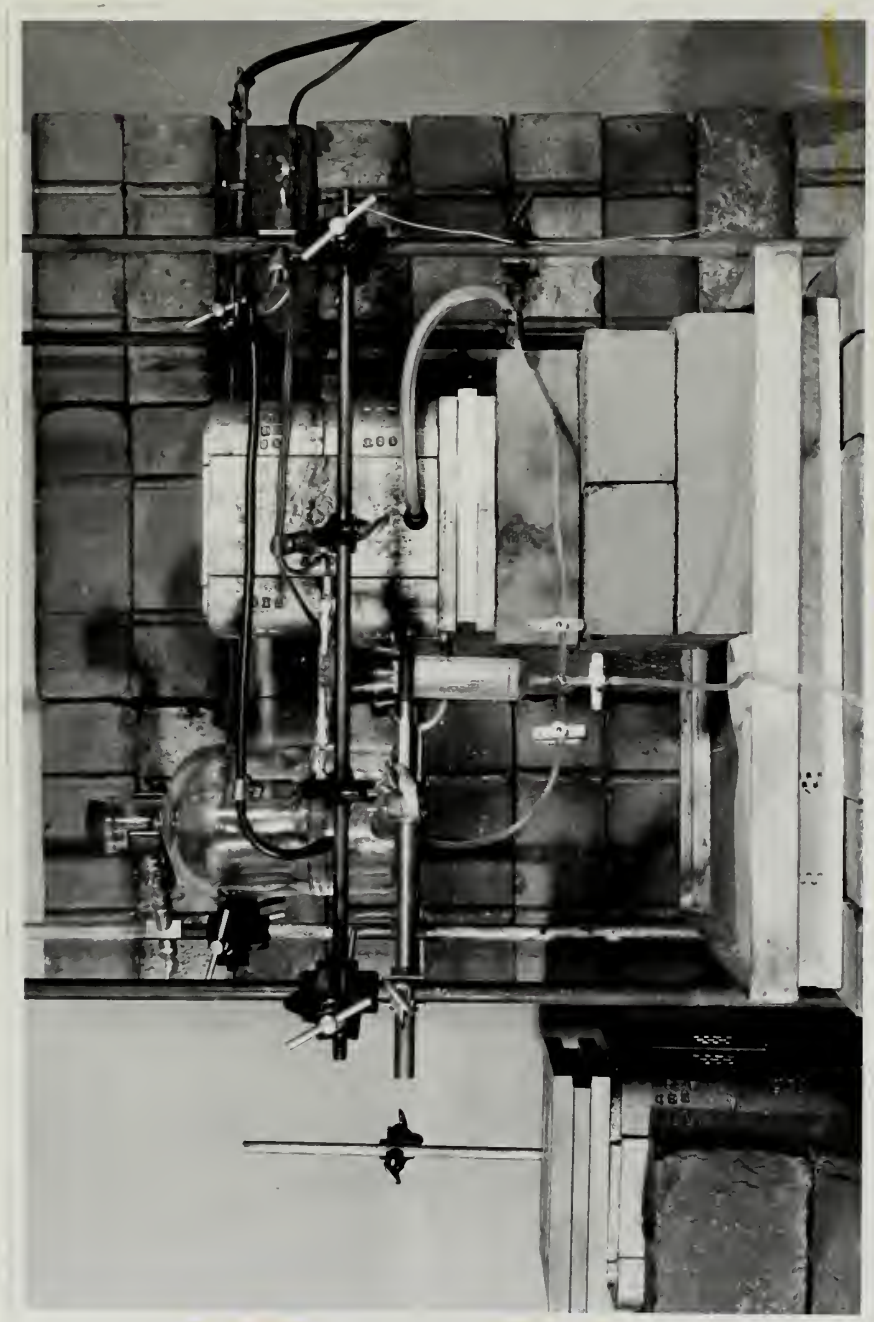

PHOTOGRAPH C-1: THE NERVE STIMULATION UNIT, SHIELDING AND ASSOCIATED EQUIPMENT

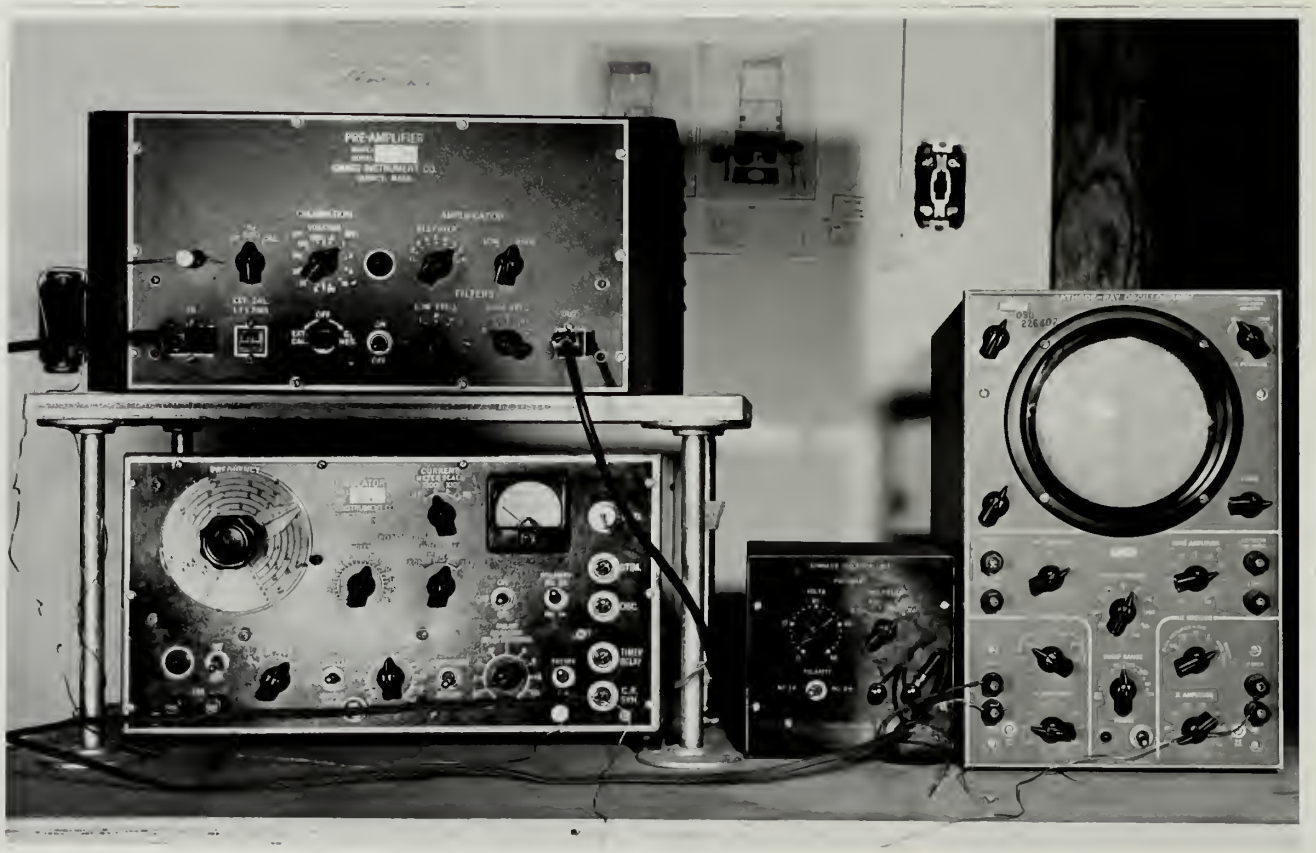

PHOTOGRAPH C-2: THE ELECTRONIC STIMULATING, AMPLIFYING AND RECORDING EQUIPMENT

PHOTOGRAPH C-3: THE NERVE STIMULATION PLATFORM

D [illegible]

The individual data observed and computed are summarized in the following tables. The Roman type numerals appearing in parentheses under the column headings refer to that similarly indexed equation in Section II by means of which the particular column value was computed.

Runs numbered 1 to 14 were made on nerve sections excised from the common leopard frog, Rana pipiens, while runs numbered from 15 to 28 were sections from the giant bull frog, Rana catesbiana. All subjects appeared in a healthy state, manifesting full reflexes, prior to sacrifice. All experimental nerve sections were stimulated prior to and on the completion of a run to determine if the capacity to conduct an impulse was still retained. This action was monitored by the appearance of the action potential appearing on the oscilloscope screen.

RUN NO.	EXPERIMENTAL CONDITIONS
1-5,13-18	Stimulated at frequency of 100 per sec. Time run 13'40", for a total number of stimuli delivered of 100,000
5-10,19-[illegible]	Stimulated at a frequency of 10[illegible] per sec. Time run [illegible]'20", for a total number of stimuli delivered of 200,000
11-14,2[illegible]-28	Stimulated at a frequency of 10[illegible] per sec. Time run 30', for a total number of stimuli delivered of [illegible]0,000.

E Solutions

The initiated data summarized and compared are presented to the following pages. The tables list the values obtained by determination under the optimum conditions previously found necessary to obtain it by means of both the potentiometric titration and spectrophotometry.

Some considered I to be more than to allow another solution that the second indicated that this effect was observed that it is to be more sensitive. All experiments carried out separately [illegible] to conduct the [illegible] of a run to determine it prior to any of the [illegible] of a run to determine it the solvents to remove an impurity was still evaporated. Each portion was examined by the absorption of the working [illegible] solvents to the [illegible] method.

[illegible]	[illegible]
1×10⁻³–1×10⁻²	[illegible] of [illegible] of [illegible] and [illegible] was [illegible] at [illegible]
1×10⁻⁴–1×10⁻³	[illegible] by [illegible] of [illegible] and [illegible] was [illegible] at [illegible]
1×10⁻⁵–1×10⁻⁴	[illegible] at [illegible] of [illegible] at [illegible]

TABLE I

Run Number	1	2	3	4	5
Date	3/8/51	3/9/51	3/21/51	3/22/51	3/22/51
Weight of control in mg.	9.8	11.4	15.5	13.5	15.2
Length of control in cm.	19	25.	24	27	31
Weight of stim. sec. mg.	11.0	9.6	14.4	11.8	14.0
Length of stim. sec. cm.	24	29.5	25	25	28
Vol. of bath sol. in ml.	13.75	13.5	14.3	13.5	14.2
$(dn/dt)_5$	6.31	7.80	14.00	9.02	15.2
$(dn/dt)_6$	3.69	6.45	11.5	8.32	14.2
$(dn/dt)_7$	907.0	844	951	928	890
$t_5 - t_0$ (min.)	95	82	59	113	39
$t_6 - t_0$	83	53	48	102	26
$t_7 - t_0$	86	44	50	96	32
f_1-decay factor	1.075	1.0488	1.05	1.0305	1.05

TABLE I-(CONT'D)

Run Number	1	2	3	4	5
f_2-decay factor	1.065	1.045	1.0389	1.080	1.020
f_3- " "	1.043	1.0349	1.0383	1.0768	1.025
$(dn/dt)_5 f_1$	5.79	8.15	14.68	9.82	16.7
$(dn/dt)_6 f_2$	5.93	6.72	11.95	8.07	14.48
$(dn/dt)_7 f_3$	950	875	986	995	911.5
# Na ions in bath Col/ml	9.49×10^{19}	7.9×10^{19}	7.015×10^{19}	7.015×10^{19}	7.015×10^{19}
Ratio of Na.conc te$(dn/dt)_7 f_3$	9.99×10^{16}	9.06×10^{16}	7.12×10^{16}	7.06×10^{16}	7.7×10^{16}
#Na ions adsorbed by control per sq.	4.01×10^{16}	$5.\times10^{16}$	5.47×10^{16}	5.84×10^{16}	7.42×10^{16}
#Na ions present stim. nerve sect.	6.77×10^{17}	$7.\times10^{17}$	10.42×10^{17}	6.9×10^{17}	13.0×10^{17}
#Na ions adsorbed stim. nerve sect. Refer Eq.XII	4.41×10^{17}	5.1×10^{17}	7.87×10^{17}	4.5×10^{17}	$10.\times10^{17}$
#Na ions taken up by section.	2.36×10^{17}	$2.\times10^{17}$	2.55×10^{17}	2.42×10^{17}	$2.\times10^{17}$
Total surface area of fibres cm^2	2.85	29.	24.85	2.9	27.85

| | | |

Table I-(cont'd)

Run Number	1	2	3	4	5
Na ions taken up by section per stimulus	2.36×10^{12}	2.253×10^{12}	2.38×10^{12}	2.42×10^{12}	2.28×10^{12}
Na ions taken up by section /stimulus/cm^2	7.94×10^{10}	7.58×10^{10}	10.27×10^{10}	10.30×10^{10}	9.41×10^{10}
Moles of Na taken up by sect. /stimulus/cm^2	1.68×10^{-13}	1.575×10^{-13}	1.705×10^{-13}	1.755×10^{-13}	1.535×10^{-13}
Na ions taken up by sect./sec/cm^2	19.84×10^{13}	18.98×10^{13}	20.54×10^{13}	21.12×10^{13}	19.32×10^{13}
Moles of Na taken up by sect. /sec/cm^2	3.31×10^{-10}	3.15×10^{-10}	3.41×10^{-10}	3.51×10^{-10}	3.15×10^{-10}
Coulombs transferred/0.450msec /cm^2.	1.5×10^{-8}	1.44×10^{-8}	1.548×10^{-8}	1.590×10^{-8}	1.305×10^{-8}
Potential diff.in mv.,pure capacitive case(Eq.IX-b)	13.5	10.26	12.65	14.3	12.53
Potential diff.in mv.,Capacitance and resistance(Eq.IX-c)	49.2	38.0	46.2	53.2	46.6

TABLE I-(CONT'D)

Run Number	6	7	8	9	10
Date	3/9/31	3/10/31	3/10/31	3/10/31	3/2[illegible]/31
Weight of control in mg.	17.7	8.2	16.2	17.8	18.2
Length of control in cm.	17	12	20	27	25
Weight of stim. sect. mg	17.6	8.1	15.4	16.8	15.0
Length of stim. sect. cm.	21	16	20	25	[illegible].5
Volume of bath sol. in ml.	15.2	12.25	15.4	15.4	15.6
$(dn/dt)_5$	9.65	7.00	12.49	9.25	10.04
$(dn/dt)_6$	.27	4.18	7.83	9.93	14.27
$(dn/dt)_7$	750	1015	681	681	1134
t_5-t_0 (min)	86	169	26	35	259
t_6-t_0 "	81	158	19	35	219
t_7-t_0 "	56	57	20	22	43
f_1-decay factor	1.068	1.137	1.019	1.027	1.196

| | | |

TABLE I-(CONT'D)

Run Number	6	7	8	9	10
f_6-decay factor	1.056	1.1285	1.015	1.028	1.130
f_3- "	1.051	1.0446	1.033	1.0145	1.033
$(dn/dt)_6 f_1$	10.20	7.37	12.71	9.60	20.80
$(dn/dt)_8 f_2$	3.48	4.625	7.65	10.20	13.32
$(dn/dt)_7 f_3$	720	1030	647	678	1174
Na ions in with sol./cl.	7.98×10^{19}	9.83×10^{19}	9.00×10^{19}	9.83×10^{19}	8.56×10^{19}
Ratio of Na.conc. to $(dn/dt)_7 f_3$	10.03×10^{16}	8.71×10^{16}	13.93×10^{16}	13.80×10^{16}	8.6×10^{16}
Na ions adsorbed by control per sq.	1.971×10^{16}	4.03×10^{16}	9.66×10^{16}	7.82×10^{16}	7.9×10^{16}
Na ions present stim.nerve sect.	10.21×10^{17}	6.94×10^{17}	14.82×10^{17}	13.07×10^{17}	19.03×10^{17}
Na ions adsorbed stim.nerve memb. (after eq.III	8.47×10^{17}	5.993×10^{17}	10.23×10^{17}	8.44×10^{17}	13.4×10^{17}
Na ions taken up by section.	4.74×10^{17}	2.945×10^{17}	4.54×10^{17}	4.63×10^{17}	5.90×10^{17}
Total surface area of fibres cm^2	21.88	17.89	29.85	24.85	20.4

TABLE I-(CONT'D)

Run Number	6	7	8	9	10
Na ions taken up by section per stimulus	3.37×10^{12}	1.47×10^{12}	3.47×10^{12}	2.81×10^{12}	3.45×10^{12}
Na ions taken up by section /stimulus/cm^2	15.4×10^{10}	6.74×10^{10}	15.94×10^{10}	12.9×10^{10}	15.8×10^{10}
Moles of Na taken up by sect. /stimulus/cm^2	2.56×10^{-13}	1.12×10^{-13}	2.65×10^{-13}	2.14×10^{-13}	2.63×10^{-13}
Na ions taken up by sect./sec/cm^2	30.8×10^{13}	13.48×10^{13}	31.88×10^{13}	25.8×10^{13}	31.6×10^{13}
Moles of Na taken up by sect./sec/cm^2	5.12×10^{-10}	2.24×10^{-10}	5.30×10^{-10}	4.29×10^{-10}	5.26×10^{-10}
Ionic mass transferred/0.456 sec/cm^2	2.46×10^{-8}	1.08×10^{-8}	2.55×10^{-8}	2.06×10^{-8}	2.53×10^{-8}
Potential diff. in mv., pure capacitive case (Eq. II-b)	20.55	11.0	14.6	18.4	20.55
Potential diff. in mv., Capacitance and resistance (Eq. II-c)	76.1	40.8	54.2	45.9	76.1

TABLE I-(CONT'D)

Run Number	11	12	13	14
Date	3-20-51	3-21-51	3-22-51	3-1 -51
Weight of control in mg.	15.2	14.4	13.4	13.4
Length of control in cm.	21	24	23	29
Weight of stim. nerv. mg.	14.6	12.6	13.2	30.3
Length of stim. nerv. cm.	25	26	23.5	34
Volume of bath sol. in ml.	15.0	15.8	14.7	18.1
$(dn/dt)_5$	31.5	34.4	19.55	3.54
$(dn/dt)_6$	62.4	21.3	10.75	5.17
$(dn/dt)_7$	1043.9	1168	889	380.5
t_5-t_0 (min.)	46	70	58	65
t_6-t_0 (min.)	43	62	250	38
t_7-t_0 (min.)	32	46	36	11
f_1-decay factor	1.0278	1.0549	1.2104	1.037

TABLE I-(CONTD)

Run Number	11	12	13	14
f_2-decay factor	1.0365	1.0484	1.0480	1.051
f_3- " "	1.0169	1.0187	1.0178	1.0178
$(dn/dt)_S f_1$	64.4	26.75	20.01	6.98
$(dn/dx)_0 f_2$	84.0	30.15	15.56	5.76
$(dn/dt)_y f_3$	1018	1210	214	85
No.ions in Satd Sol/cc.	5.92×10^{19}	5.4923×10^{19}	7.016×10^{19}	7.0987×10^{19}
Ratio of No conc. to $(dn/dt)_y f_3$	3.58×10^{16}	2.748×10^{16}	7.48×10^{16}	18.61×10^{16}
No ions absorbed by control per sec.	2.538×10^{17}	1.65×10^{17}	8.62×10^{17}	1.09×10^{17}
No ions present stim.nerve sect.	4.118×10^{18}	13.81×10^{17}	13.38×10^{17}	12.90×10^{17}
No ions undergoing stim.nerve dist. Refer Eq.III	3.740×10^{18}	10.42×10^{17}	11.8×10^{17}	8.37×10^{17}
No ions taken up by section	5.48×10^{17}	3.40×10^{17}	1.78×10^{17}	4.53×10^{17}
Total surface area of fibres in cm^2	24.9	25.9	28.4	19.9

TABLE I-(CONT'D)

Rat Number	11	12	13	14
Na ions taken up per section per stimulus	1.201×10^{-13}	1.13×10^{-12}	1.850×10^{-12}	1.134×10^{-12}
Na ions taken up by section /stimulus/cm^2	4.84×10^{10}	4.57×10^{10}	7.4×10^{10}	4.6×10^{10}
Moles of Na taken up by sect. /stim./cm^2	8.804×10^{-13}	0.726×10^{-13}	0.82×10^{-13}	0.75×10^{-13}
Na ions taken up by sect./sec/cm^2	10.80×10^{-13}	9.08×10^{14}	10.8×10^{15}	7.6×10^{15}
Moles of Na taken up by sect. /sec/cm^2	1.744×10^{-10}	1.502×10^{-10}	1.8×10^{-10}	1.275×10^{-10}
Coulombs transferred/c.f/sec/cm^2	0.774×10^{-8}	0.679×10^{-8}	0.791×10^{-8}	0.5×10^{-8}
Potential diff.in mv.,zero negative emac(fig.11-b)	4.44	5.88	4.6	4.66
Potential diff. in mv., Capacitance and resistance. (Eq.14-18	23.86	21.55	24.45	17.25

TABLE II

Run number	16	18	17	19
Date	7/27/51	8/2/51	8/10/51	8/17/51
Weight of vertical in mg.	44.2	17.2	9.2	11.4
Length of vertical in cm.	24	20.5	17	14
Weight of side.vert.mg.	4.5	2.2	3.4	1.2
Length of side.vert.cm.	9	21.5	24	19
Values of $k_0 k_1$ sol. in ml.	14.9	13.75	17.5	17.5
$(dn/dt)_0$	24.4	11.43	5.55	4.59
$(dn/dt)_0$	20.3	9.42	2.66	2.14
$(dn/dt)_7$	1016	716	411	1030
t_5-t_0 (min)	90	68	110	78
t_6-t_0 (min)	81	54	98	72
t_7-t_0 (min)	43	42	84	56
f_1-decay factor	1.0712	1.0316	1.0875	1.0514

TABLE II-(CONT'D)

Run number	15	16	17	18
f_2-decay factor	1.0647	1.0461	1.0704	1.0369
f_3-decay factor	1.0333	1.0326	1.0668	1.0078
$(dn/dt)_5 f_1$	28.25	18.05	9.47	4.37
$(dn/dt)_6 f_2$	21.73	6.59	5.365	3.26
$(dn/dt)_7 f_3$	1873	740	439	1103
/Na loss in bath sol/ml.	10.16×10^{19}	9.69×10^{19}	7.34×10^{19}	14.3×10^{19}
Ratio of Na conc. to $(dn/dt)_7 f_3$	7.91×10^{16}	1.08×10^{17}	1.71×10^{16}	1.18×10^{16}
/Na ions removed by control per mg.	3.34×10^{15}	4.99×10^{15}	3.41×10^{15}	3.61×10^{16}
/Na ions present stim.nerve sect.	1.18×10^{17}	1.42×10^{17}	4.1×10^{17}	2.42×10^{17}
/Na ions removed stim.nerve sect. refer fig.III	1.41×10^{17}	1.79×10^{17}	3.9×10^{17}	2.08×10^{17}
/Na ions taken up by section	7.4×10^{17}	4.44×10^{17}	2.14×10^{17}	1.32×10^{17}
Total surface area of fibres in cm^2	1.85	21.4	21.9	15.9

Table II-(cont'd)

Run number	16	16	17	18
[illegible]	7.06×10^{12}	1.44×10^{13}	1.14×10^{12}	1.62×10^{12}
[illegible]	1.2×10^{10}	2.72×10^{10}	4.70×10^{10}	1.08×10^{10}
[illegible]	1.37×10^{-12}	$.16 \times 10^{-12}$	1.88×10^{-12}	1.18×10^{-1}
[illegible]	43.4×10^{12}	44.7×10^{12}	41.4×10^{12}	$[illegible] \times 10^{12}$
[illegible]	1.06×10^{-10}	7.09×10^{-10}	1.05×10^{-10}	1.04×10^{-10}
[illegible]	$.34 \times 10^{-8}$	1.16×10^{-8}	1.63×10^{-8}	1.11×10^{-8}
[illegible]	49.5	47.8	10.0	9.5
[illegible]	102.1	100.2	43.2	46.5

TABLE II-(CONT'D)

Run number	19	20	21	22
Date	1/18/51	1/27/51	2/1/51	2/2/51
Weight of control in mg.	17.8	19.6	8.4	13.8
Length of control in mm.	22.6	14	9	20
Weight of chlor. sect.mg.	8.9	22.0	3.9	14.7
Length of calm. sect.mm	31	21	13	19.5
Vol of test sol. in ml.	15.6	17.5	15.6	16.6
$(dn/dt)_6$	16.10	26.4	3.64	6.37
$(dn/dt)_5$	9.29	17.8	2.85	2.014
$(dn/dt)_7$	375.4	3012	1490	823
t_5-t_0 (min)	365	32	80	55
t_6-t_0 (min)	378	58	80	52
t_7-t_0 (min)	354	115	150	43
f_1-decay factor	1.295	1.0247	1.0712	1.0429

Table II-(Contd'd)

Run number	19	20	21	22
f_x-decay factor	1.2534	1.[illegible]7	1.[illegible]10	1.[illegible]08
f_y-decay factor	1.[illegible]4	1.[illegible]19	1.1815	1.[illegible]0
$(dn/dt)_o f_1$	80.48	87.00	8.[illegible]	8.80
$(dI/dt)_o f_2$	19.10	18.29	[illegible]5	1.[illegible]95
$(dS/dt)_o f_3$	1:60	0.20	1:79	006
No. ions in with sol/ml.	7.14×10^{19}	8.01×10^{19}	7.164×10^{19}	7.164×10^{19}
ratio of Ia conc. to $(dn/dt)_o f_3$	3.07×10^{18}	3.11×10^{18}	3.07×10^{18}	3.06×10^{18}
No. ions adsorbed by control [illegible]	1.20×10^{16}	2.08×10^{16}	1.60×10^{16}	1.32×10^{16}
No ions present stln.-meres sect.	11.08×10^{17}	8.7×10^{17}	$3.1.0 \times 10^{17}$	5.8×10^{17}
No ions adsorbed stln.-[illegible] sect. buffer (Exp. III)	3.82×10^{17}	4.60×10^{17}	2.1×10^{17}	3.80×10^{17}
No. ions taken up by reaction	2.04×10^{17}	1.08×10^{17}	0.940×10^{17}	2.82×10^{17}
Total surface area of fibres in cm^2	30.83	20.9	12.94	19.42

Table II-(Cont'd)

Run number	19	20	21	22
#Na ions leaving up per cm² per stimulus	1.03×10^{12}	9.82×10^{12}	8.47×10^{12}	1.1×10^{13}
#Na ions taken up by reaction /stimulus/cm²	5.24×10^{10}	4.8×10^{10}	4.6×10^{10}	5.97×10^{10}
#ales of Na taken up by reac. /stim/cm²	$5.[illegible] \times 10^{-11}$	3.47×10^{-11}	3.75×10^{-11}	9.78×10^{-11}
#s ions taken up by reac./stm/cm²	$7.[illegible] \times 10^{11}$	$3.[illegible] \times 10^{12}$	3.00×10^{12}	1.1×10^{13}
moles of Na taken up by reac./stm/cm²	1.215×10^{-10}	5.91×10^{-10}	$4.[illegible] \times 10^{-10}$	1.170×10^{-9}
coulombs transferred /0.45msec./cm²	$.[illegible] \times 10^{-3}$	$2.[illegible] \times 10^{-3}$	$2.[illegible] \times 10^{-3}$	$0.[illegible] \times 10^{-3}$
Potential diff. in mv.,pure capacitive case (R=.2-Ω)	4.45	[illegible].5	4.03	7.47
Potential diff. in mv.,capacitance and resistance (R=.2-Ω)	18.45	14.4	18.1	29.68

TABLE II-(CONT'D)

Run Number	23	24	25	26
Date	1-23-51	1-23-51	1-24-51	1-24-51
Weight of control in lbs.	38.2	41.0	37.0	40.8
Length of control in ins.	27	34	28	27.5
Weight of stim. incr. lbs.	74.2	84.4	78.2	81.4
Length of stim. section.	24	34	29	29.5
Rel. of hyd. sol. in ft.	14.1	14.0	14.1	14.1
$(dx/dt)_a$	11.38	67.8	12.5	54.8
$(dx/dt)_\beta$	3.67	54.3	19.48	47.0
$(dx/dt)_\gamma$	829.3	1198	988	1179
$t_\beta - t_0$ (min)	53	32	152	41
$t_\delta - t_0$ (min)	37	37	115	37
$t_\gamma - t_0$ (min)	27	9	39	21
f_1-Decay factor	1.0416	1.025	1.0277	1.022

[illegible]

[illegible]

TABLE II-(CONT'D)

Run Number	23	24	25	26
f_2-decay factor	1.0256	1.029	1.0916	1.0386
f_3-decay factor	1.0206	1.035	1.05	1.015
$(dn/dt)_5 f_1$	12.13	59.4	24.7	58.7
$(dn/dt)_6 f_2$	9.72	55.6	21.2	58.7
$(dn/dt)_7 f_3$	384.3	1500	915	1152
Na ions in bath. sol/ml.	7.14×10^{19}	6.49×10^{19}	7.018×10^{19}	6.493×10^{19}
Ratio of Na conc. to $(dn/dt)_7 f_3$	18.6×10^{16}	5.41×10^{16}	7.66×10^{16}	5.64×10^{16}
Na ions adsorbed by control per sq.	2.81×10^{16}	--------	--------	10.68×10^{16}
Na ions present stim.nerve sect.	21.85×10^{17}	--------	--------	37.59×10^{17}
Na ions adsorbed stim.nerve sect. Refer (Eq.III)	20.85×10^{17}	--------	--------	33.25×10^{17}
Na ions taken up by section	1.0×10^{17}	--------	--------	4.34×10^{17}
Total surface area of fibres in cm^2	13.85	--------	--------	14.4

TABLE II-(CONT'D)

Run Number	23	24	25	26
Na ions taken up per section per stimulus	0.333×10^{12}	-------	-------	1.240×10^{12}
Na ions taken up per section /stimulus/cm^2	1.013×10^{10}	-------	-------	3.92×10^{10}
moles of Na taken up by sect. /stimulus/cm^2	0.150×10^{-13}	-------	-------	0.984×10^{-13}
Na ions taken up by sect/sec/cm^2	2.2×10^{13}	-------	-------	12.9×10^{13}
moles of Na taken up by sect /sec/cm^2	0.369×10^{-10}	-------	-------	2.16×10^{-10}
Coulombs transfer/sec/0.455sec /cm^2	0.1622×10^{-9}	-------	-------	0.946×10^{-3}
Potential diff. in mv., pure capacitive case (Eq.II-b)	1.35	-------	-------	7.68
Potential diff. in mv., capacitance and resistance (Eq.II-c)	5.0	-------	-------	29.2

TABLE III

[illegible] DATA FOR NERVE FIBRES - RANA PIPIENS

Run No.	Time min.	Weight of nerve sect. in mg.	Length in cm.	Activity in cps per mg.	Number of Sodium ions absorbed per mg. of tissue wet.
1	5	7.6	7.0	0.421	4.13x10^{16}
2	10	7.0	7.0	0.585	5.75x10^{16}
3	15	9.5	7.0	0.691	9.73x10^{16}
4	20	7.1	8.5	0.682	8.66x10^{16}
5	30	6.4	7.5	0.242	3.00x10^{16}
6	40	6.4	7.5	0.704	6.94x10^{16}
7	50	5.8	10.0	0.9x0	9.07x10^{16}
8	60	5.6	8.0	0.980	9.66x10^{16}
9	75	5.8	8.0	0.900	8.86x10^{16}
10	90	6.4	7.0	1.025	10.1x10^{16}
11	95	7.0	7.0	1.050	15.35x10^{16}
12	110	7.0	7.0	1.00	9.86x10^{16}
13	130	5.6	7.5	1.060	10.48x10^{16}

101

TABLE IV

SURFACE ADSORPTION DATA FOR NERVE SECTIONS - RANA CATESBIANA

Run No.	Time in min.	Weight of nerve sect. in mg.(wet)	Length in cm.	Activity in cps per mg.	Number of Sodium ions adsorbed per mg. of tissue wet
1	10	2.2	4	0.445	9.53x10^{16}
2	20	2.2	3.5	0.[illegible]	[illegible]x10^{16}
3	[illegible]0	[illegible]	7.0	0.554	[illegible]x10^{16}
4	43	7.6	7.5	0.490	3.90x10^{16}
5	60	5.5	8.5	0.[illegible]76	[illegible]x10^{16}
6	80	11.5	12	0.635	[illegible]x10^{16}
7	70	4.2	5.5	0.[illegible]	[illegible]x10^{16}
8	77	8.0	13.5	0.963	3.0x10^{16}
9	90	10.5	9.5	0.395	2.15x10^{16}
10	100	10.0	9.0	0.[illegible]38	[illegible].71x10^{16}

Bath solution contained 7.154×10^{19} atoms of Sodium per ml., with a ratio of concentration to activity of 5.81×10^{16} atoms sodium per cps.

TABLE V

SUMMARY OF COMPUTED DATA

Run No.	Period of Stimulation	Ion ions taken up by 1 sect, /stimulus/cm²	moles of Na taken up by sect./stim./cm²	Coulombs transferred/stimulus/cm²	Voltage Diff. (A)	(B)
1	16'40"	9.94x10^10	1.26x10^-13	1.52x10^-8	13.66	43.6
2	"	7.69x10^10	1.27x10^-13	1.23x10^-8	10.38	33.6
3	"	10.27x10^10	1.70x10^-13	1.642x10^-8	13.53	53.2
4	"	10.20x10^10	1.75x10^-13	1.680x10^-8	14.06	53.2
5	"	9.41x10^10	1.65x10^-13	1.505x10^-8	12.53	43.6
Average Values		9.97x10^10	1.49x10^-13	1.531x10^-8	12.72	47.24
6	33'20"	15.4x10^10	2.56x10^-13	2.466x10^-8	20.55	78.1
7	"	9.24x10^10	1.57x10^-13	1.519x10^-8	11.9	40.6
8	"	10.04x10^10	1.68x10^-13	1.79x10^-8	14.6	56.5
9	"	9.4x10^10	1.545x10^-13	1.487x10^-8	12.4	45.9
10	"	15.4x10^10	2.56x10^-13	2.465x10^-8	20.55	78.1
Average Values		11.85x10^10	1.97x10^-13	1.897x10^-8	15.82	58.6

TABLE 7 (CONT'D)

Run No.	Period of Stimulation	No. ions taken up by Ag = mole/stimulus/cm^2	Moles of Na taken up by mole/stim/cm^2	Coulombs transferred/stimulus/cm^2	Voltage (mV)	Diff.ev. (%)
11	80'	4.88×10^{10}	0.004×10^{-13}	$.774\times10^{-3}$	3.44	[illegible]
12	"	1.07×10^{10}	0.728×10^{-13}	0.898×10^{-3}	[illegible]	[illegible]
13	"	1.94×10^{10}	[illegible]	0.73×10^{-3}	[illegible]	[illegible]
14	"	0.8×10^{10}	0.082×10^{-13}	0.660×10^{-3}	4.68	17.25
Average Values		1.41×10^{10}	0.702×10^{-13}	0.706×10^{-3}	[illegible]	61.77

| | | |

TABLE VI

LIST OF EXPERIMENTAL EQUIPMENT

The following apparatus was made available by Dr. Eric Ogden of the Department of Physiology, The Ohio State University or purchased on U.S.Navy contract.

(1) Stimulator Unit Model S 8	Grass Instrument Co.
(2) Stimulation Isolation Unit	Grass Instrument Co.
(3) Geiger Mueller Tube Model 1G5-1 Serial 14PM4 M.W. 2.1 mg/cm^2	Tracer Lab., Inc.
(4) Preamplifier Unit Mod.P4	Grass Instrument Co.
(5) Cathode-ray Oscilloscope. Mod. 304	A.B.DuMont Lab.Inc.
(6) Radio Assay Sample Holder Mod. 40-1B.	Tracer Lab. Inc.
(7) Auto Scaler 40-1B	Tracer Lab. Inc.
(8) Platinum Electrode Nerve Stimulation Platform	Medical Shop Hamilton Hall, O.S.U.
(9) Glass Nerve Chamber	Glass Blowing Shop, Dept. of Chemistry, O.S.U.

(10)	Lead Shielding Bricks (20) 2" x 8" x 8"#	Tracer Lab.,Inc. Medical Shop, Hamilton Hall, U.P.U.
(11)	Remote Pipetting Device Mod. R-18#	Tracer Lab.,Inc.
(12)	Remote Handling Tongs Mod.R-17#	Tracer Lab.,Inc.
(13)	Set of Al.Absorbers Mod. R-2A#	Tracer Lab.,Inc.
(14)	Radioactive Reference Source Co^{60} Cat.No.R-1#	Tracer Lab.,Inc.
(15)	Cupped Assay Planchets Mod.R-2C#	Tracer Lab.,Inc.
(16)	Fine Ring Stands	Dept.of Physiology,U.P.U.
(17)	Assorted Pyrex Glassware, graduates, etc.	Dept.of Physiology,U.P.U.
(18)	Saigon Tubing 10 feet, I.D.= 3 mm.	Dept.of Physiology,U.P.U
(19)	Film Type Dosimetry Badge	Dr. T.Rogers Health Physicist,U.P.U.

Thesis Bennett 15594
B39
A study of the transfer of sodium ions in relation the ion migration potential in the production of the action potential of nerve tissues, utilizing radioactive tracer techniques

594
odium
ation
he
s,
utilizing radioactive tracer techniques

DATE DUE

ACCOPRESS BINDER

thesB39
A study of the transfer of sodium ions i
3 2768 002 13713 5
DUDLEY KNOX LIBRARY